NOBLES®

SPEED SCRUB®

FaST Foam Scrubbing Technology

The Safe Scrubbing Alternative®

17 in / 20 in AUTOMATIC SCRUBBER

(S/N 80000000-90000000)

ecoH2O™ ELECTRICALLY CONVERTED WATER

PARTS MANUAL

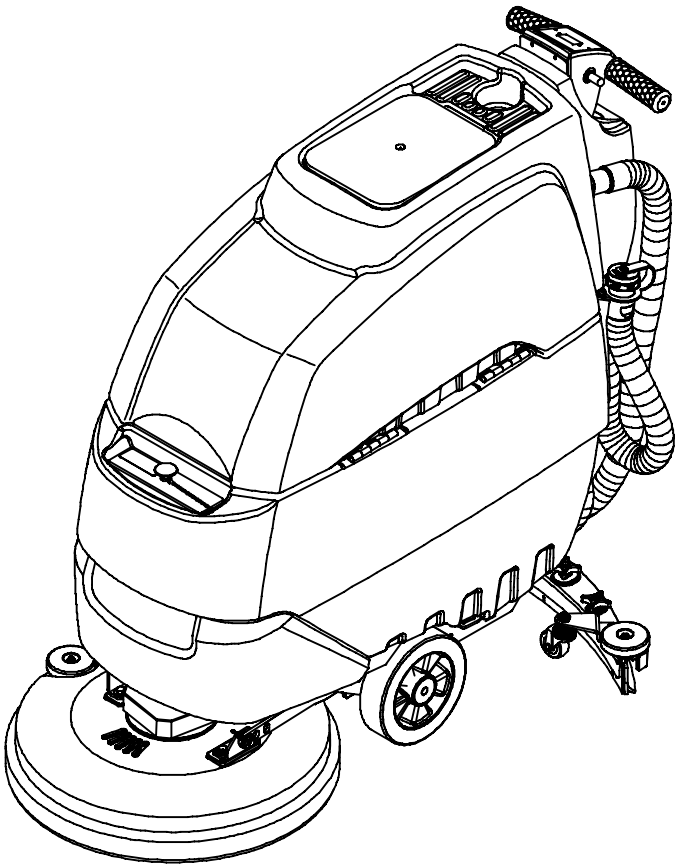

1033586
Rev. 03 (09-2008)

www.nobles.com

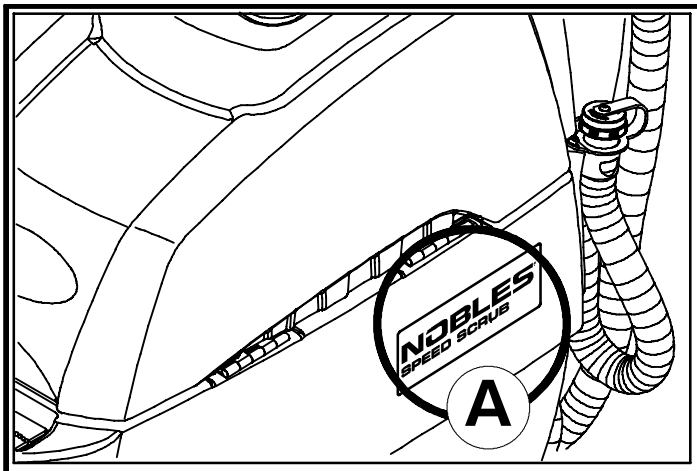

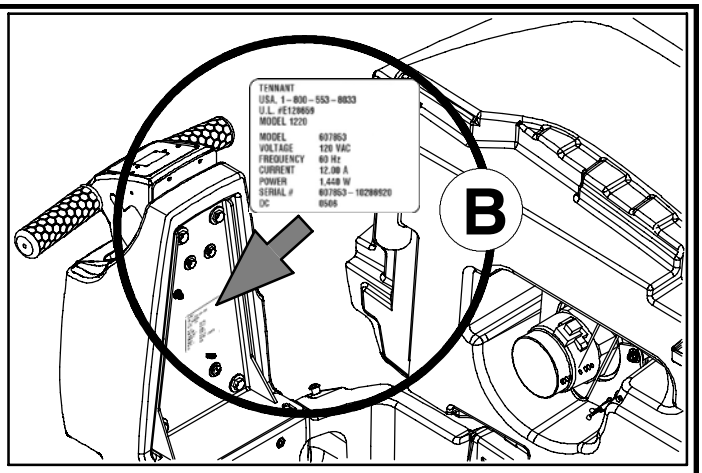

Ref	Part No.	Serial Number	Description	Qty.
1	82681	(000000–)●	acket Wldt, Lpg Mount	1
▽ 2	63810	(000000–)	ch Assy, Lpg Tank Mtg, W/Nut	4
▲ 3	51839	(000000–)	t Adjustable, Lpg Tank Mtg	2
4	49263	(000000–)	Tie, Cable	3
5	82556	(000000–001039)	Bracket, Vaporizer	1
6	54930	(000000–)	Vaporizer, LPG	1

HOW TO ORDER PARTS – See diagram above

Only use TENNANT Company supplied or equivalent parts. Parts and supplies may be ordered online, by phone, by fax or by mail.

Follow the steps below to ensure prompt delivery.

1. **(A)** Identify the machine model.
2. **(B)** Identify the machine serial number from the data label.
3. **(C)** Ensure the proper serial number is used from the parts list.
4. Identify the part number and quantity. Do not order by page or reference numbers.
5. Provide your name, company name, customer ID number, billing and shipping address, phone number and purchase order number.
6. Provide detail shipping instructions.

(D) ▽ – identifies an assembly
▲ – identifies parts included in assembly
(E) ● – identifies a recommended stock item

Please fill out at time of installation for future reference.

Model No. – _____

Serial No. – _____

Machine Options – _____

Sales Rep. – _____

Sales Rep. phone no. – _____

Customer ID Number – _____

Installation Date – _____

Tennant Company
PO Box 1452
Minneapolis, MN 55440 USA
Phone: (800) 553-8033 or (763) 513-2850

www.nobles.com

Specifications and parts are subject to change without notice.

Copyright © 2007, 2008 TENNANT Company, Printed in China

TABLE OF CONTENTS

REPLACEMENT BRUSH AND PAD DRIVER GROUP 4
RECOVERY TANK GROUP 6
VACUUM MOTOR GROUP 8
SOLUTION TANK GROUP 10
UPPER CONTROL CONSOLE GROUP, BRUSH ASSIST MODEL 12
LOWER CONTROL CONSOLE GROUP, BRUSH ASSIST MODEL 14
COMPONENT PANEL GROUP, BRUSH ASSIST MODEL 16
UPPER CONTROL CONSOLE GROUP, DRIVE MODEL 18
LOWER CONTROL CONSOLE GROUP, DRIVE MODEL 20
COMPONENT PANEL GROUP, DRIVE MODEL 22
WHEEL GROUP, BRUSH ASSIST MODEL 24
WHEEL GROUP, DRIVE MODEL (S/N 80001782–) 26
WHEEL GROUP, DRIVE MODEL (S/N 80000000–80001781) 28
SCRUB HEAD GROUP, 43 cm (17 in) MODEL . . 30
SCRUB HEAD GROUP, 50 cm (20 in) MODEL . . 32
SCRUB HEAD LIFT GROUP 34
SOLUTION GROUP, FaST MODEL 36
SOLUTION GROUP, FaST MODEL – CONT'D 38
9003906 FAST INJECTOR ASSEMBLY BREAKDOWN (S/N 80001391–) 40
9003801 FAST INJECTOR ASSEMBLY BREAKDOWN (S/N 80000000–80001390) . . . 41
SOLUTION GROUP, ec-H2O MODEL 42
SOLUTION GROUP, ec-H2O MODEL – CONT'D 44
9004561 ec-H2O MODULE ASSEMBLY BREAKDOWN 46
SOLUTION GROUP, STANDARD MODEL 48
SQUEEGEE GROUP, 500 mm 50
BATTERY AND CABLE GROUP, 12V/105 AH, 43 cm (17 in) BRUSH ASSIST MODEL 52
BATTERY AND CABLE GROUP, 12V/130 Ah, 50 cm (20 in) BRUSH ASSIST MODEL 53
BATTERY AND CABLE GROUP, 12V/155 AH, 50 cm (20 in) DRIVE MODEL 54
ELECTRICAL DIAGRAM, BRUSH ASSIST STANDARD & FaST MODEL 55
ELECTRICAL DIAGRAM, DRIVE STANDARD & FaST MODEL 56
ELECTRICAL DIAGRAM, BRUSH ASSIST ec-H2O MODEL 57
ELECTRICAL DIAGRAM, DRIVE ec-H2O MODEL 58

OPTIONS

OFF-BOARD BATTERY CHARGER GROUP . . . 59
ON-BOARD BATTERY CHARGER GROUP, STANDARD & FaST MODEL 60
ON-BOARD BATTERY CHARGER GROUP, ec-H2O MODEL 62
PARKING BRAKE GROUP 64
EMERGENCY STOP BUTTON GROUP 65
DOCUMENTATION GROUP 66

REPLACEMENT BRUSH AND PAD DRIVER GROUP

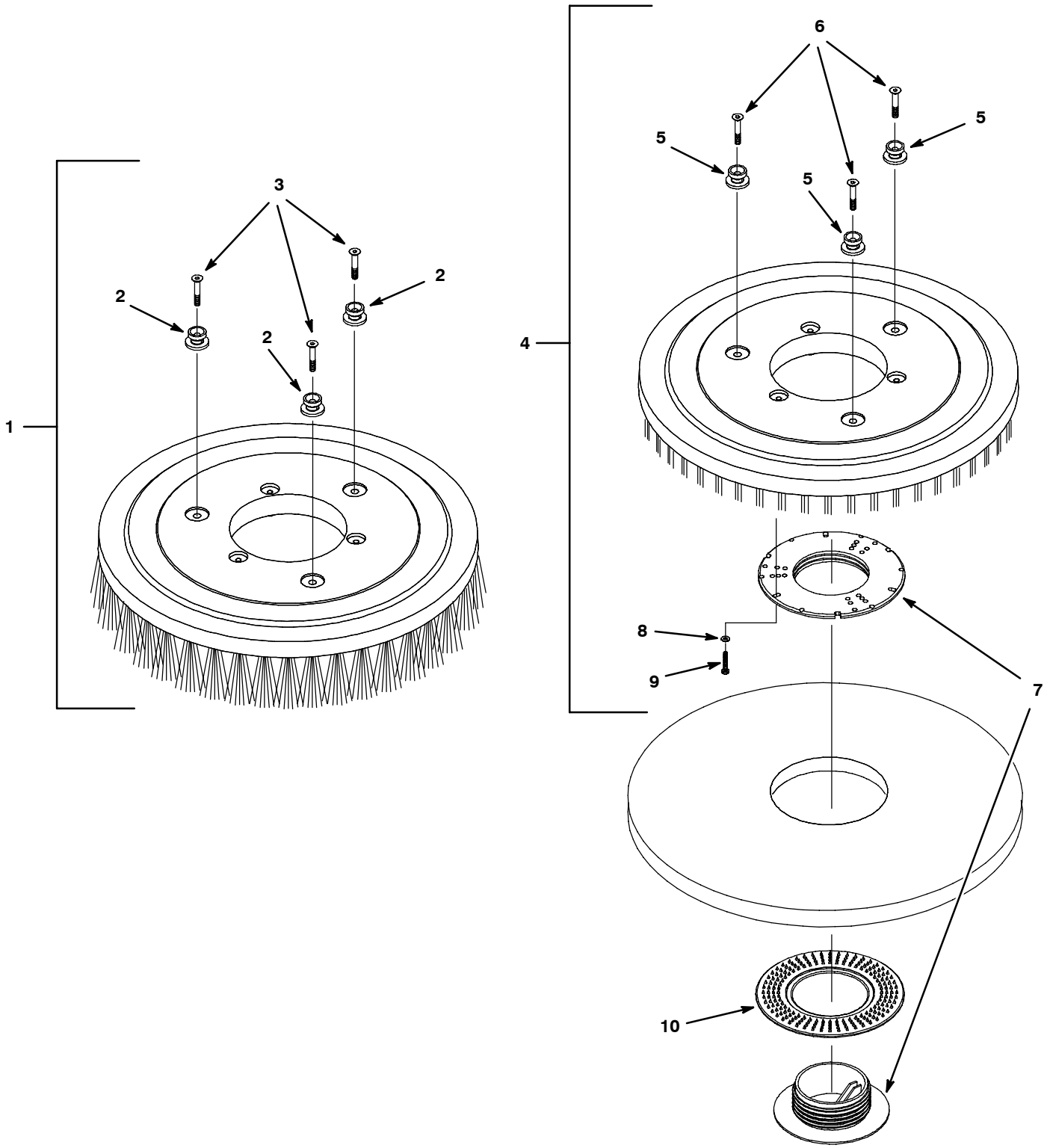

REPLACEMENT BRUSH AND PAD DRIVER GROUP

Ref.	Part No.	Serial Number		Description	Qty.
1	1016765	(80000000–	)●	Brush Assy, Disk, 43cm/17inch, Polypropylene Scrub (Black)	1
1	1016764	(80000000–	)●	Brush Assy, Disk, 43cm/17inch, Soft Nylon (White)	1
1	1016763	(80000000–	)●	Brush Assy, Disk, 43cm/17inch, Super Abrasive Scrub (Gray)	1
1	1016811	(80000000–	)●	Brush Assy, Disk, 50cm/20inch, Polypropylene Scrub (Black)	1
1	1016810	(80000000–	)●	Brush Assy, Disk, 50cm/20inch, Soft Nylon (White)	1
1	1016805	(80000000–	)●	Brush Assy, Disk, 50cm/20inch, Super Abrasive Scrub (Gray)	1
2	1013018	(80000000–	)	Stud, Drive, Brush Pad	3
3	07809	(80000000–	)	Screw, Flt, M6 X 1.0 X 35, 10.9	3
4	1016813	(80000000–	)●	Driver Assy, Pad, 43cm/17inch	1
4	1016814	(80000000–	)●	Driver Assy, Pad, 50cm/20inch	1
5	1013018	(80000000–	)	Stud, Drive, Brush Pad	3
6	07809	(80000000–	)	Screw, Flt, M6 X 1.0 X 35, 10.9	3
7	32506	(80000000–	)●	Device, Centering, Rh Pad Retainer	1
8	41579	(80000000–	)	Washer, Flat, #08, Ss	3
9	04403	(80000000–	)	Screw, Pan, M4 X 0.7 X 25, Ss, Nl	3
10	32505	(80000000–	)●	Washer, Flat, 3.60b 5.65d .06, Brush Pad	1

● RECOMMENDED STOCK ITEMS

RECOVERY TANK GROUP

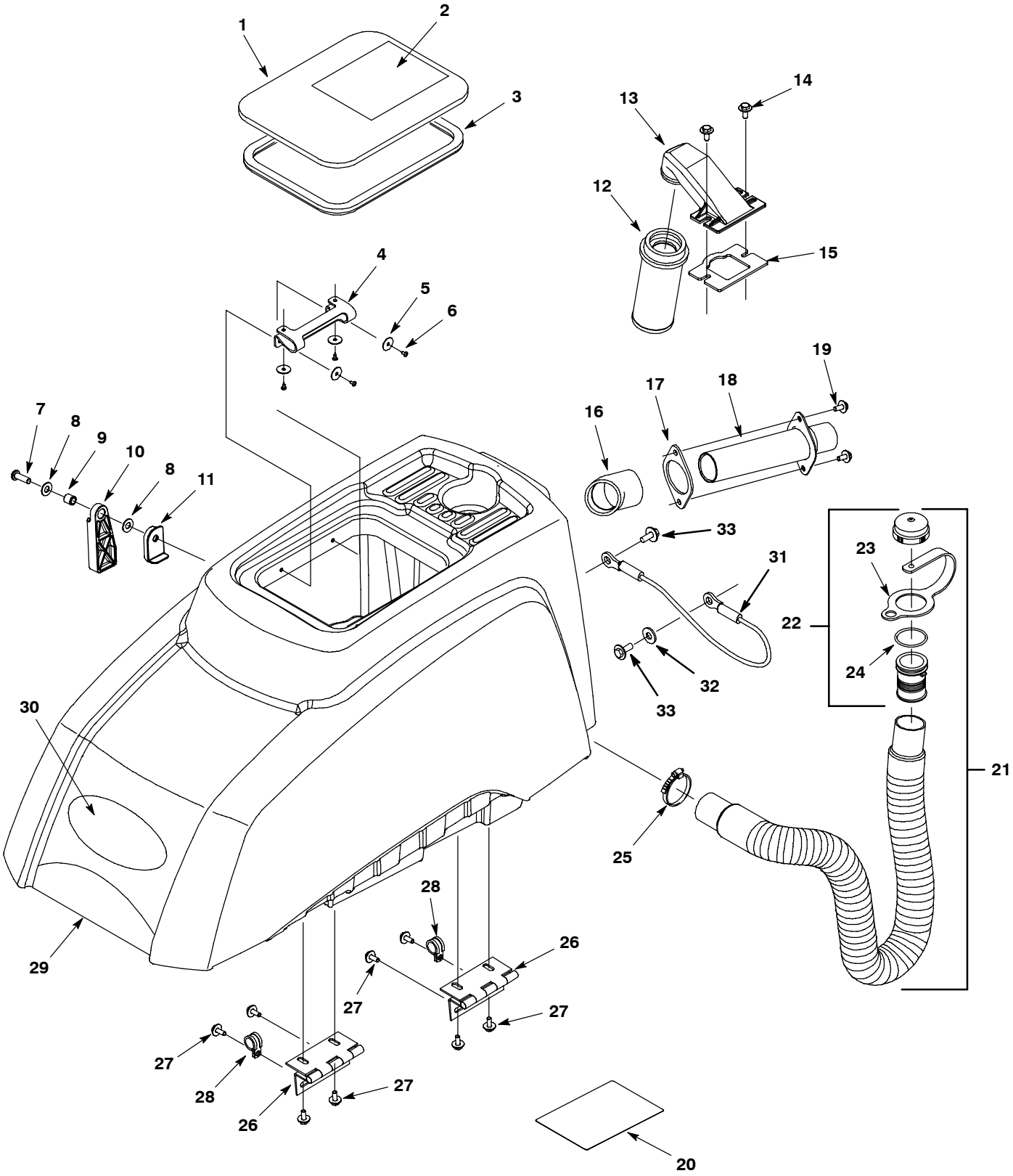

RECOVERY TANK GROUP

	Ref.	Part No.	Serial Number		Description	Qty.
∇	1	9003396	(80000000-	)●	Lid Assy, W/ Label [En/Es/Fr/Jp]	1
▲	2	1036679	(80000000-	)	Label, Warning [Exp,Fre,Shk En/Fr/Es/Jp]	1
▲	3	630367	(80000000-	)●	Seal, .50, .50w 33.9l, Adh [D Shape]	1
	4	630056	(80000000-	)●	Hinge, Cover, Tank Lid	1
	5	1009168	(80000000-	)	Washer, Flat, 0.17b 0.75d .04, Ss	4
	6	3701.6	(80000000-	)	Screw, Pan, #06-32 X 0.38, Phl Ss Shtmtl	4
	7	1039118	(80000000-	)	Screw, Btn, M8 X 1.25 X 30, Blk	1
	8	140027	(80000000-	)	Washer, Flat, 0.35b 0.75d .04, Ss	2
	9	222460	(80000000-	)	Sleeve, P/M, 0.31b 0.50d 0.5l	1
	10	1022399	(80000000-	)	Support, Tank, Prop, Blk, Nyl	1
	11	1022904	(80000000-	)	Bracket, Sppt, Stop, Blk, Nyl	1
	12	630052	(80000000-	)●	Float, Shut-Off, (2)Ball, 1.75d	1
	13	1011777	(80000000-	)	Mount, Float, Mold	1
	14	1034731	(80000000-	)	Screw, Hex, M6 X 1.00 X 16, Sems, Ss	2
	15	1013628	(80000000-	)●	Gasket, Mtg, Float, .125th, Neo, Adh	1
	16	1028801	(80000000-	)	Fitting, Plstc, E45, 1.25	1
	17	1024602	(80000000-	)●	Gasket, Adapter, Hose .13, Neo, Adh	1
	18	1021214	(80000000-	)	Tube, Hose, Adapter, 1.5d	1
	19	1034731	(80000000-	)	Screw, Hex, M6 X 1.00 X 16, Sems, Ss	2
	20	1014154	(80000000-	)	Label, Instr, Battery	1
∇	21	1043538	(80000000-	)●	Hose Assy, Drain, 1.50id X 29.5l, Blk	1
▲∇	22	1008639	(80000000-	)●	Cap, Drain Assy	1
▲▲	23	1019563	(80000000-	)●	Strap, Cap, Drain	1
▲▲	24	1008637	(80000000-	)●	Seal, Org, 1.48id 1.76od	1
	25	11531	(80000000-	)	Clamp, Hose, Wormdrive, 1.06-2.00d, .56w	1
	26	1012540	(80000000-	)	Hinge, 6mmpin 2.5mm Th 73.5mmw 100mml	2
	27	1034731	(80000000-	)	Screw, Hex, M6 X 1.00 X 16, Sems, Ss	8
	28	1016354	(80000000-	)	Clamp, Cable, Ss, 0.50d X 0.50w [Insul]	2
	29	1028056	(80000000-	)	Tank, Recvy, Rm-Spg, Trimmed [Ss3]	1
	30	1032293	(80000000-	)	Label, Logo, Nobles	1
	31	140960	(80000000-	)	Cable, Glv .13d 014.5l .34eye /.34eye	1
	32	01684	(80000000-	)	Washer, Flat, 0.25 Ss	1
	33	1034731	(80000000-	)	Screw, Hex, M6 X 1.00 X 16, Sems, Ss	2

∇ ASSEMBLY

▲ INCLUDED IN ASSEMBLY

● RECOMMENDED STOCK ITEMS

VACUUM MOTOR GROUP

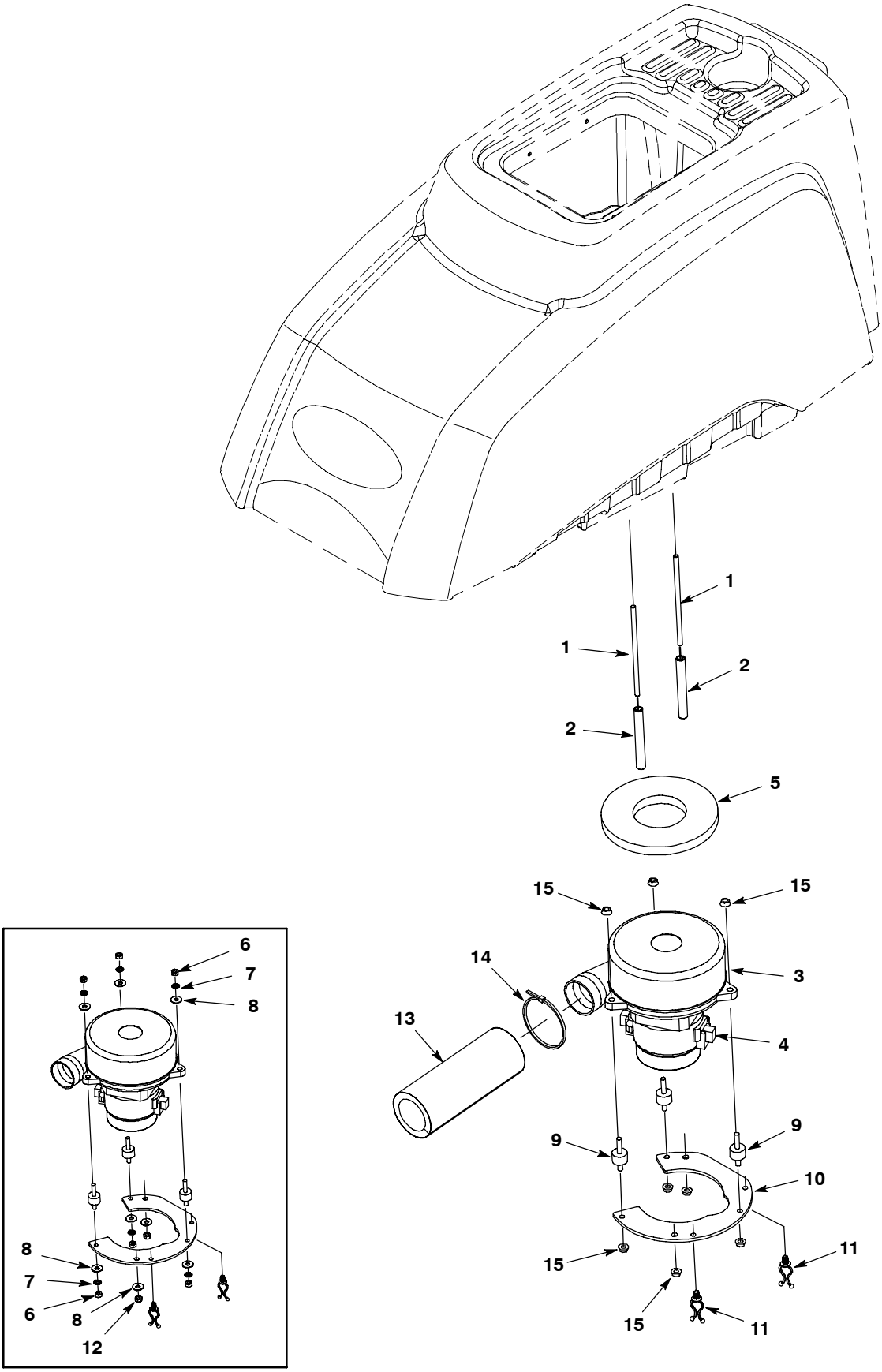

VACUUM MOTOR GROUP

	Ref.	Part No.	Serial Number		Description	Qty.
	1	1015412	(80000000–	)	Rod, Thrd, Full, M6x1.0, 140l	2
	2	1024575	(80000000–	)	Tube, 0.43d 0.28b 03.3l, Pl	2
∇	3	1023271	(80000000–	)●	Fan, Vacuum, 5.7d 2stage 024vdc [Bpt,Pk]	1
▲	4	372883	(80000000–	)●	Vr, Brush Kit, Motor, Ele	1
	5	100038	(80000000–	)●	Gasket, Vacuum Mtr 5.7 Epdm W/Psa	1
	6	07785	(80000000–80000774	)	Nut, Hex, Std, M6 X 1.0, A2, Ss	6
	7	07515	(80000000–80000774	)	Washer, Lock, Int, 0.25 Ss	6
	8	01684	(80000000–80000774	)	Washer, Flat, 0.25 Ss	8
	9	1011093	(80000000–	)	Isolator, Vib, .75d, M6 Stud Both Ends	3
	10	1011962	(80000000–	)	Bracket, Mtg, Vacuum	1
	11	30406	(80000000–	)●	Clip, Keeper	2
	12	08712	(80000000–80000774	)	Nut, Hex, Lock, M6 X 1.0, Ss, Nl	2
	13	1009906	(80000000–	)●	Muffler, Exhaust, Vacuum, 170l	1
	14	130773	(80000000–	)	Tie, Cable, Nyl, 11.0l, .14w, 3.0 Max. D	1
	15	1040381	(80000775–	)	Nut, Hex, Flng, M6 X 1.0, Ss [Serrated]	8

∇ ASSEMBLY

▲ INCLUDED IN ASSEMBLY

● RECOMMENDED STOCK ITEMS

SOLUTION TANK GROUP

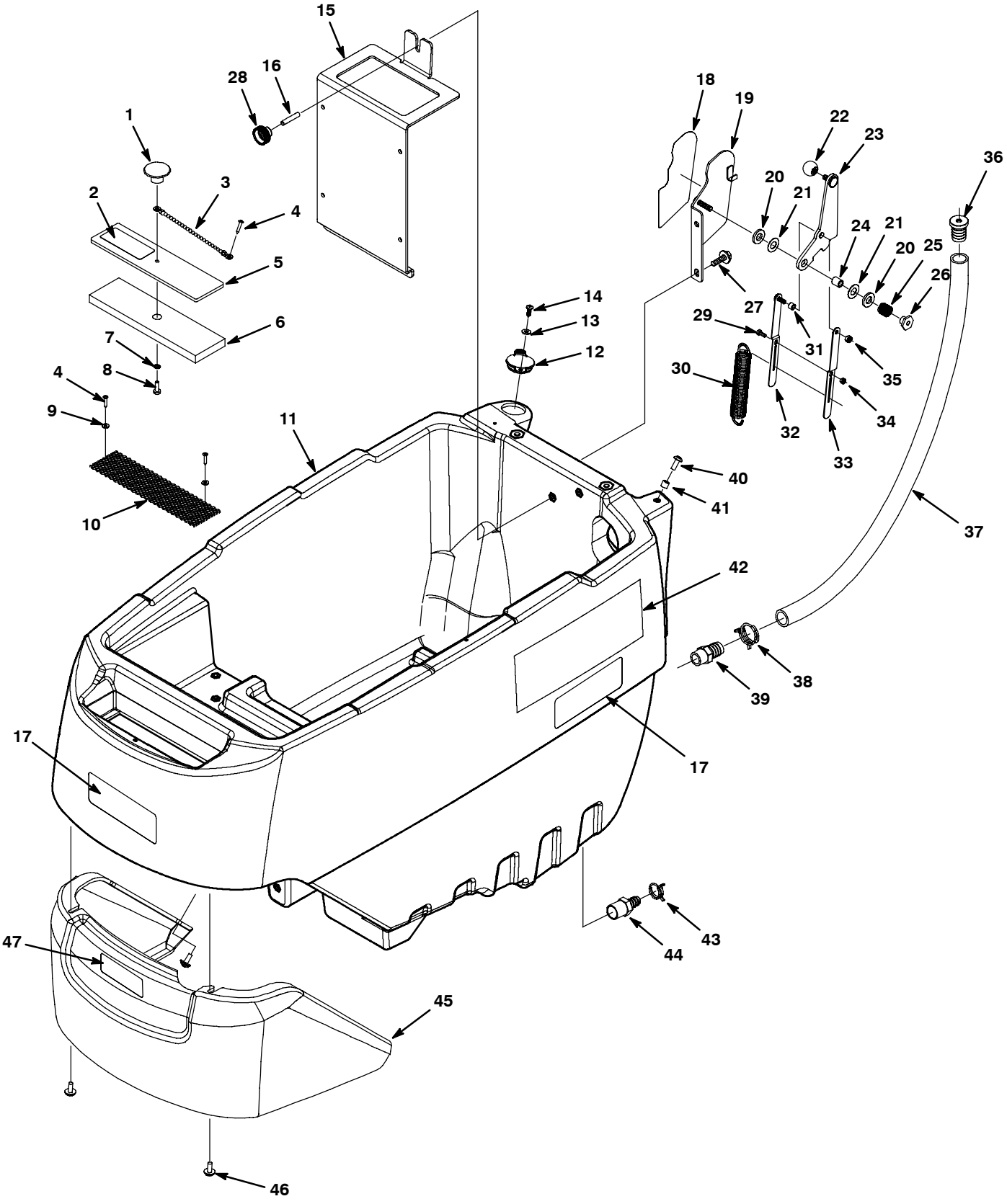

SOLUTION TANK GROUP

Ref.	Part No.	Serial Number		Description	Qty.
1	578301	(80000000-	)●	Knob 10-32f Fill-Cover	1
2	391451	(80000000-	)	Label [Attention Fast Users] (Fast Model)	1
2	1050003	(80002319-	)	Label, User, Attention, Ec-H2o (ec-H2O Model)	1
3	621443	(80000000-	)●	Chain, Ball, #10, 157mml, Ss	1
4	140826	(80000000-	)	Screw, Pan, #06-32 X 0.75, Phl Ss Shtmtl	3
5	605061	(80000000-	)	Cover, Fill, Soltn	1
6	605062	(80000000-	)●	Gasket, Cover, Soltn Fill	1
7	07514	(80000000-	)	Washer, Lock, Int, #10, Ss	1
8	140841	(80000000-	)	Screw, Pan, #10-32 X 0.62, Phl, Ss	1
9	41578	(80000000-	)	Washer, Flat, #06, Ss	2
10	606146	(80000000-	)●	Screen, Fltr, Soltn Fill, Nat	1
11	1040042	(80000000-	)	Tank, Soltn, Rm-Spg, Trimmed [T3c/Ss3]	1
12	1012965	(80000000-	)●	Cap, Port, Soltn Fill	1
13	01683	(80000000-	)	Washer, Flat, #10, Ss	1
14	1018155	(80000000-	)	Screw, Pan, M5 X 0.8 X16, Ss, Tcut	1
15	1040598	(80000000-	)	Bracket, Mtg, Chrgr [Ss3]	1
16	1018559	(80000000-	)	Screw, Set, M6 X 1.00 X 30, Ss [Fltpt]	1
17	1050019	(80002319-	)	Label, Side, Ec-H2o [Ss3/Ss5/Ssrider] (ec-H2O Model)	3
18	1018389	(80000000-	)	Label, Lever, Dual Down Press	1
19	1018020	(80000000-	)	Bracket Wldt, Mtg, Dual Dp Lever	1
20	140127	(80000000-	)	Bearing, Thrust,0.51b X 1.0 X .12, Brz	2
21	89710	(80000000-	)	Washer, Flat, 0.51b 1.00d .03, Nyl	2
22	1017156	(80000000-	)●	Knob, Ball, M8 Insert, 40mmd, Plstc	1
23	1017493	(80000000-	)	Lever, Lift, Dual Down Press	1
24	1014336	(80000000-	)	Sleeve, P/M, 08.4b 12.6d 14.5l, Pl	1
25	1018756	(80000000-	)	Spring, Cmpr, 0.7od .080wir 00.7l,Pl[Mw]	1
26	1018181	(80000000-	)	Nut, T, M8 X 1.25 X 0.50od X 0.4l	1
27	1020341	(80000000-	)	Screw, Hex, M8 X 1.25 X 20, Ss, Sems	2
28	578439	(80000000-	)	Nut, Thumb, M6 X 1.0, 24mm Od	1
29	09738	(80000000-	)	Screw, Hex, M5 X 0.8 X 12, Ss	1
30	1031783	(80000000-	)	Spring, Extn, 1.00od 0.12wir 06.3l	1
31	1017884	(80000000-	)	Bushing, Sleeve, 6mmb 10mmd 7mml	1
32	1017882	(80000000-	)	Link Wldt, Spring, Lever	1
33	1017805	(80000000-	)	Link, Spring, Lever	1
34	09739	(80000000-	)	Nut, Hex, Lock, M5 X 0.8, Nl, Ss	1
35	08708	(80000000-	)	Nut, Hex, Lock, M6 X 1.0, Nl	1
36	1035469	(80000000-	)	Fitting, Plastic, Bm12 [Sight Tube]	1
37	1029829	(80000000-	)	Hose, Drain, Soltn Tank [Ss3]	1
38	608915	(80000000-	)	Clamp, Hose, Wir, 1.03 - 1.09	1
39	78398	(80000000-	)	Fitting, Plstc, Str, Bm12/Pm08, Nyl	1
40	608322	(80000000-	)	Screw, Trs, M6 X 1.0 X 16, Phl, Ss	1
41	140154	(80000000-	)	Sleeve, P/M, 0.25b 0.38d 0.3l, Pl	1
42	1024781	(80000000-	)	Label, Side [Spdscrub]	2
43	607776	(80000000-	)	Clamp, Hose, Wir, .73 - .77, Silver	1
44	1023581	(80000000-	)	Fitting, Plstc, Str, Bm08/Pm08, Nyl	1
45	1031974	(80000000-	)	Cover, Head, Rm-Cphg, Trimmed	1
46	1034731	(80000000-	)	Screw, Hex, M6 X 1.00 X 16, Ss, Sems	6
47	1034921	(80000000-	)	Label, Logo, White/Black, 4.00l [Fast] (Fast Model)	1

● RECOMMENDED STOCK ITEMS

UPPER CONTROL CONSOLE GROUP, BRUSH ASSIST MODEL

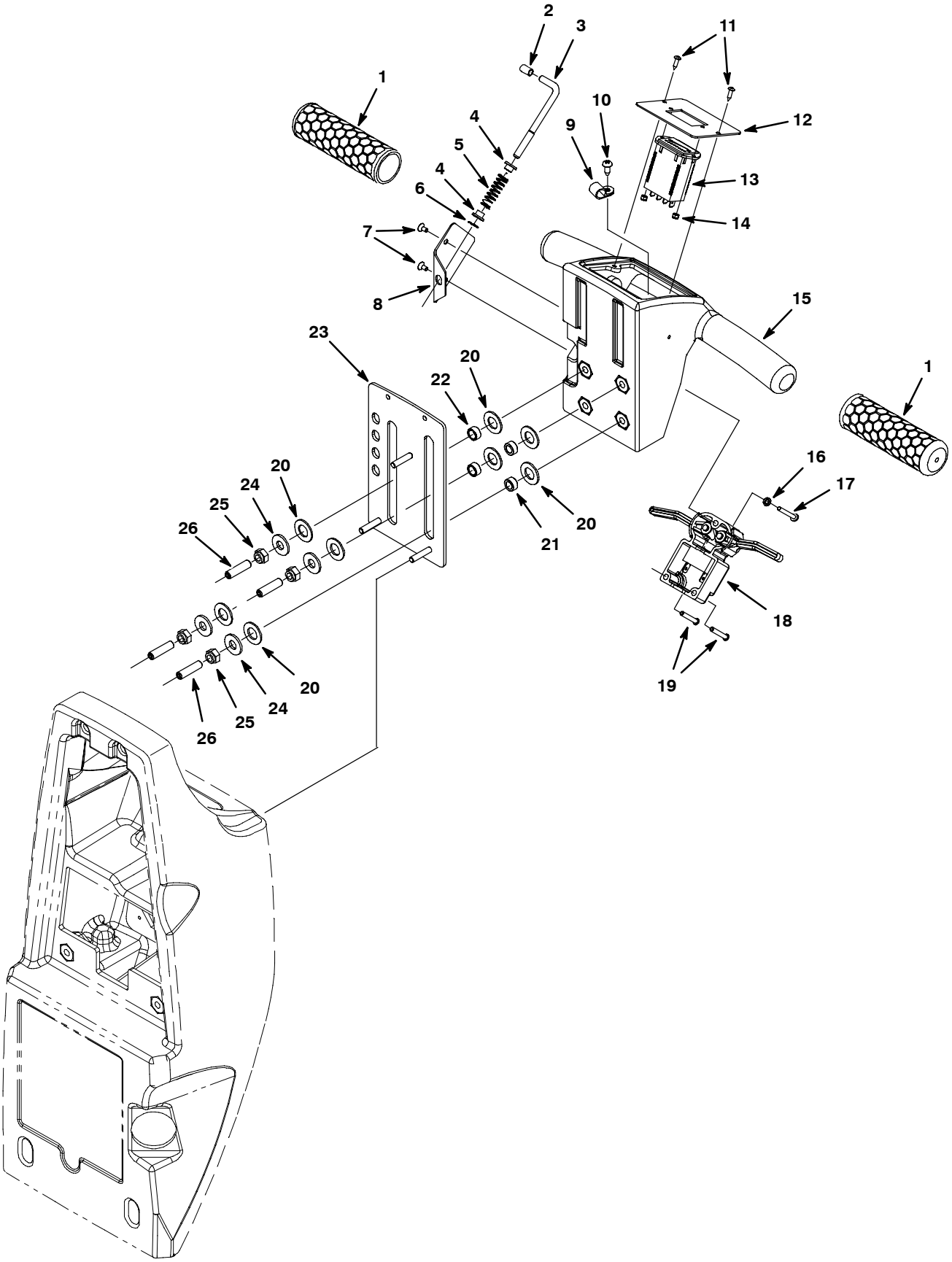

UPPER CONTROL CONSOLE GROUP, BRUSH ASSIST MODEL

Ref.	Part No.	Serial Number	Description	Qty.
1	1026407	(80000000-)●	Grip, Handle, 31.75mm Dia. X 117mm L	2
2	630094	(80000000-)	Cap, Vinyl, 2.26 Id X 12.7lg, Blk	1
3	630081	(80000000-)	Lever, Latch, Console Adjust	1
4	630083	(80000000-)	Bushing, Latch	2
5	630082	(80000000-)	Spring, Cmpr, 0.42od .04wir 01.8l, Pl,Mw	1
6	630084	(80000000-)	Ring, Retaining, Ext, 4.62mm, [E-Ring]	1
7	630114	(80000000-)	Screw, Flt, M4 X 0.7 X 8, 4.8	2
8	630087	(80000000-)	Plate, Latch, Retainer	1
9	140328	(80000000-)	Clamp, Cable, Nyl, 0.38d, Blk	1
10	1009324	(80000000-)	Screw, Pan, #10-16 X 0.50,Phl,Blk[Ty-17]	1
11	140825	(80000000-)	Screw, Pan, #06 X 0.50, Phl, Blk,Fmg[Ab]	2
12	1031162	(80000000-)	Panel, Cntrl, Upper, Battery Indicator	1
13	1016712	(80000000-)●	Indicator, Battery, 24vdc, 1.73volt/Cell	1
14	579211	(80000000-)	Nut, Hex, Lock, M3 X 0.50, Ss	2
15	1031952	(80000000-)	Console, Upper, Rm-Spg, Trimmmed, Push	1
16	02938	(80000000-)	Washer, Lock, Int, #08, Ss	1
17	33931	(80000000-)	Screw, Pan, Phl, M4 X 0.70 X 30, Ss	1
18	1031864	(80000000-)●	Controlbox, Assy, Trigger	1
19	1032889	(80000000-)	Screw, Pan, #8-18 X 1.12, F/ Plstc	2
20	608562	(80000000-)	Washer, Flat, 0.51b 0.94d .06, Nyl	8
21	607783	(80000000-)	Bearing, Sleeve, .31id X .50od X .25,Bnz	2
22	630259	(80000000-)	Bearing, 9.5id 12.7od 6.4l,Brz	2
23	1030879	(80000000-)	Plate, Slide, Console [Ss3]	1
24	01685	(80000000-)	Washer, Flat, 0.38b 0.88d .08, Ss	4
25	08709	(80000000-)	Nut, Hex, Lock, M8 X 1.25, Nl	4
26	1032057	(80000000-)	Screw, Set, M8x1.25x30, W/Patch	4

● RECOMMENDED STOCK ITEMS

LOWER CONTROL CONSOLE GROUP, BRUSH ASSIST MODEL

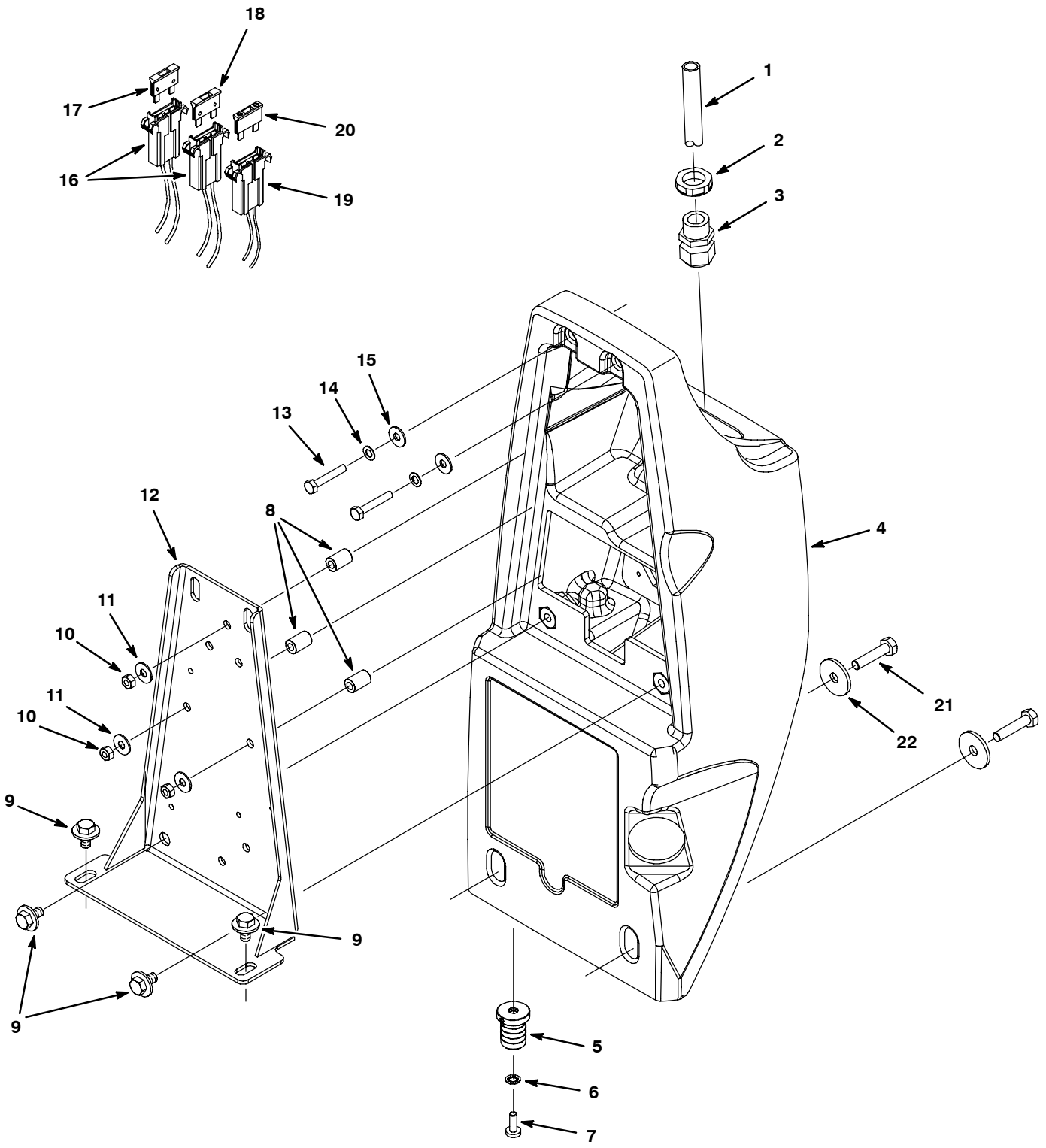

LOWER CONTROL CONSOLE GROUP, BRUSH ASSIST MODEL

	Ref.	Part No.	Serial Number		Description	Qty.
	1	1032338	(80000000–	)	Harness, Wire, Console, Push [Ss3]	1
	2	140638	(80000000–	)	Nut, Hex, Pf08, Blk Nyl [Conduit]	1
	3	130181	(80000000–	)●	Grip, Cord, Strainrelief, .50npt	1
	4	1031071	(80000000–	)	Console, Lower, Rm–Spg, Trimmed [Ss3]	1
	5	1035469	(80000000–	)	Fitting, Plstc, Bm12 [Sight Tube]	1
	6	07515	(80000000–	)	Washer, Lock, Int, 0.25 Ss	1
	7	367770	(80000000–	)	Screw, Pan, M6 X 1.0 X 16, Ss	1
	8	1031025	(80000000–	)	Bushing, Sleeve, 6.5mmb 12mmd 18mml	3
	9	1020341	(80000000–	)	Screw, Hex, M8 X 1.25 X 20, Ss, Sems	4
	10	41359	(80000000–	)	Nut, Hex, Std, M6 X 1.00, 8	3
	11	01684	(80000000–	)	Washer,Flat 0.25, Ss	3
	12	1012011	(80000000–	)	Bracket, Hsng, Cntrl	1
	13	07805	(80000000–	)	Screw, Hex, M6 X 1.0 X 35, Ss	2
	14	07515	(80000000–	)	Washer, Lock, Int, 0.25, Ss	2
	15	01684	(80000000–	)	Washer,Flat 0.25, Ss	2
∇	16	1040309	(80000000–	)	Harness, Main, Push [Ss3]	1
▲	17	1016040	(80000000–	)●	Fuse, 025a 032vdc	1
▲	18	1016029	(80000000–	)●	Fuse, 005a 032vdc	1
∇	19	1013644	(80000000–	)	Harness [Fast Option] (Fast Model)	1
▲	20	1016039	(80000000–	)●	Fuse, 007.5a 032vdc (Fast Model)	1
∇	19	1045924	(80002319–	)	Harness Assy, Wire [T3e Ec–H2o, P3] (ec-H2O Model)	1
▲	20	1047470	(80002319–	)●	Fuse, 10 Amp (ec-H2O Model)	1
	21	59658	(80000000–	)	Screw, Hex, M8 X 1.25 X 35, Ss, Nl	2
	22	1016331	(80000000–	)	Washer, Flat, 0.34b 1.25d .11, Ss	2

∇ ASSEMBLY

▲ INCLUDED IN ASSEMBLY

● RECOMMENDED STOCK ITEMS

COMPONENT PANEL GROUP, BRUSH ASSIST MODEL

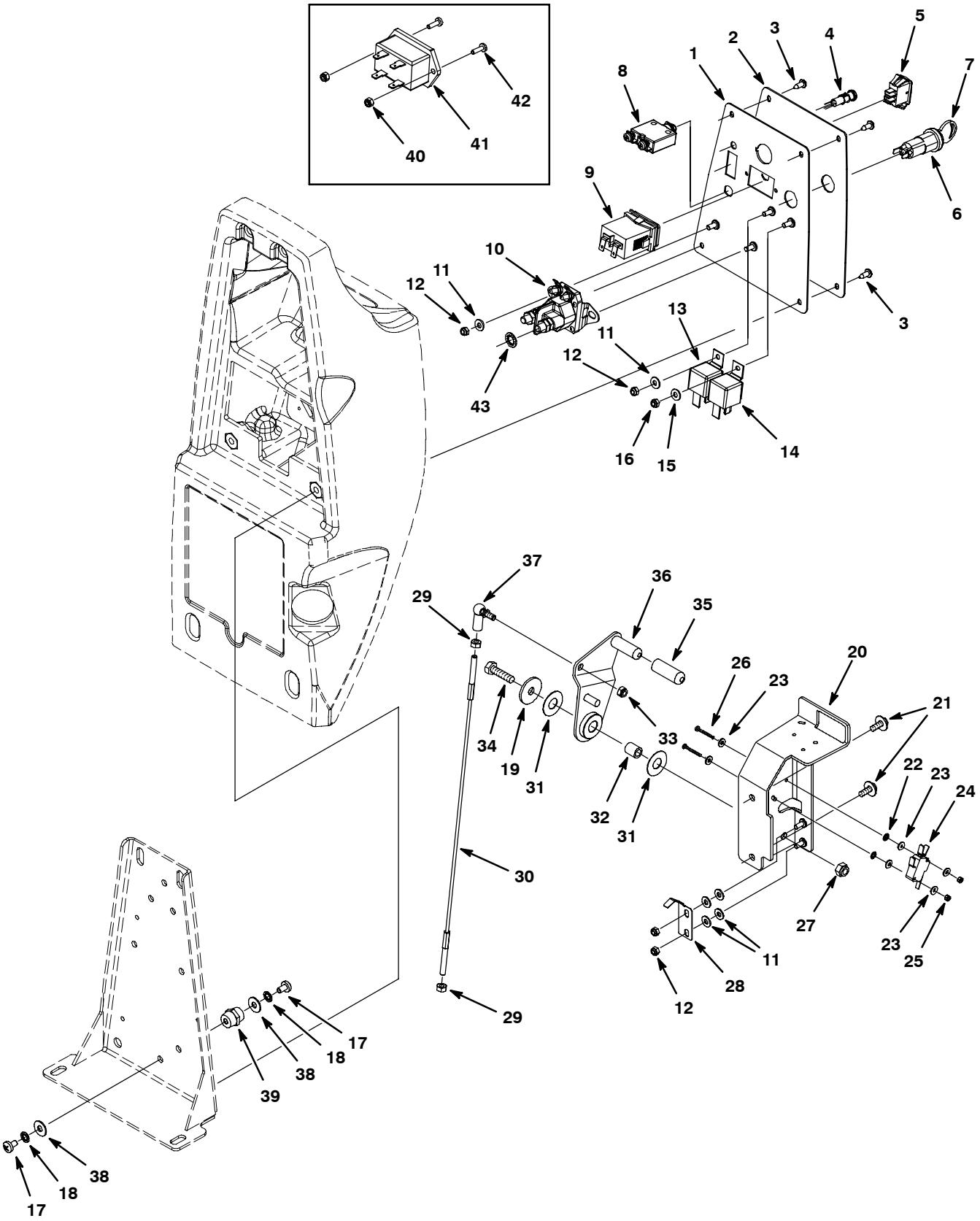

COMPONENT PANEL GROUP, BRUSH ASSIST MODEL

	Ref.	Part No.	Serial Number		Description	Qty.
	1	1012134	(80000000-	)	Panel, Cntrl, Lower	1
	2	1016628	(80000000-	)	Label, Panl, Instmt, Lower [T3/T3e/Ss3]	1
	2	1049998	(80002319-	)	Label, Console, Lower Ec-H2o [T3 Na/Aej]	1
	3	1009324	(80000000-	)	Screw, Pan, #10-16 X 0.50,Phl,Blk[Ty-17]	4
	4	1041822	(80002319-	)●	Light, Panel, Mgt, .312" Dia. (ec-H2O Model)	1
	5	130787	(80000000-	)●	Switch, Rocker, Spdt (Fast & ec-H2O Model)	1
∇	6	1011402	(80000000-	)●	Switch, Key	1
▲	7	1017696	(80000000-	)●	Key Set, Replmt [F/ Keyswitch 1011402]	1
	8	1035339	(80000000-	)●	Circuitbreaker, 37.0a	1
	9	1011282	(80002319-	)●	Gauge, Hourmeter, 12/60 Vdc [Ret Mount]	1
	10	1038490	(80000000-	)●	Relay, 24vdc, 100a, No [Trombetta]	2
	11	01683	(80000000-	)	Washer, Flat, #10, Ss	7
	12	09739	(80000000-	)	Nut, Hex, Lock, M5 X 0.80, Nl, Ss	4
	13	1012216	(80000000-	)●	Relay, 24vdc, 070a, Spst No, Plug-In	1
	14	1012216	(80000000-	)●	Relay, 24vdc, 070a, Spst No, Plug-In (Fast & ec-H2O Model)	1
	15	01683	(80000000-	)	Washer, Flat, #10, Ss (Fast & ec-H2O Model)	1
	16	09739	(80000000-	)	Nut, Hex, Lock, M5 X 0.80, Nl, Ss (Fast & ec-H2O Model)	1
	17	48732	(80000000-	)	Screw, Pan, M6 X 1.0 X 10, Ss	2
	18	07515	(80000000-	)	Washer, Lock, Int, 0.25, Ss	2
	19	1016331	(80000000-	)	Washer, Flat, 0.34b 1.25d .11, Ss	1
	20	1012850	(80000000-	)	Bracket Wldt, Lever, Sqge	1
	21	1034731	(80000000-	)	Screw, Hex, M6 X 1.00 X 16, Sems, Ss	2
	22	02938	(80000000-	)	Washer, Lock, Int, 08, Ss	2
	23	41578	(80000000-	)	Washer, Flat, #06, Ss	6
	24	1012568	(80000000-	)●	Switch, Snap, 10a, Short	1
	25	579211	(80000000-	)	Nut, Hex, Lock, M3 X 0.50, Ss	2
	26	1042062	(80000000-	)	Screw, Hex, M3 X 0.5 X 25, Ss	2
	27	08713	(80000000-	)	Nut, Hex, Lock, M8 X 1.25, Nl, Ss	1
	28	1015459	(80000000-	)	Spring, Lever, Sqge	1
	29	07785	(80000000-	)	Nut, Hex, Std, M6 X 1.00, A2, Ss	2
	30	1013479	(80000000-	)	Cable, Glv 3.18mmd 0412l M06/ M06	1
	31	1013397	(80000000-	)	Washer, Flat, M13 X 30 X 0.8, Nyl	2
	32	1014336	(80000000-	)	Sleeve, P/M, 8.40b 12.60d 14.5l, Pl	1
	33	08712	(80000000-	)	Nut, Hex, Lock, M6 X 1.00, Ss, Nl	1
	34	09011	(80000000-	)	Screw, Hex, M8 X 1.25 X 30, Ss	1
	35	1016895	(80000000-	)	Cap, Handle, Sqge Lift	1
	36	1013329	(80000000-	)	Lever Wldt, Sqge	1
	37	1012747	(80000000-	)	Balljoint, M06 X 1.0 Fem, M06 X 1.0 Mal	1
	38	01684	(80000000-	)	Washer, Flat, 0.27b 0.69d .05, Ss	2
	39	1013523	(80000000-	)●	Stand-Off, Wir, M6, 18 Hex, 20l, Insul	1
	40	579211	(80000000-80002318	)	Nut, Hex, Lock, M3 X 0.50, Ss	2
	41	1014572	(80000000-80002318	)●	Gauge, Hourmeter, 14-48vdc, Lcd, Rt,.1hr	1
	42	06920	(80000000-80002318	)	Screw, Pan, M3 X 0.50 X 10, 4.8	2
	43	43952	(80000000-	)	Washer, Lock, Int, 0.31, Ss	1

∇ ASSEMBLY

▲ INCLUDED IN ASSEMBLY

● RECOMMENDED STOCK ITEMS

UPPER CONTROL CONSOLE GROUP, DRIVE MODEL

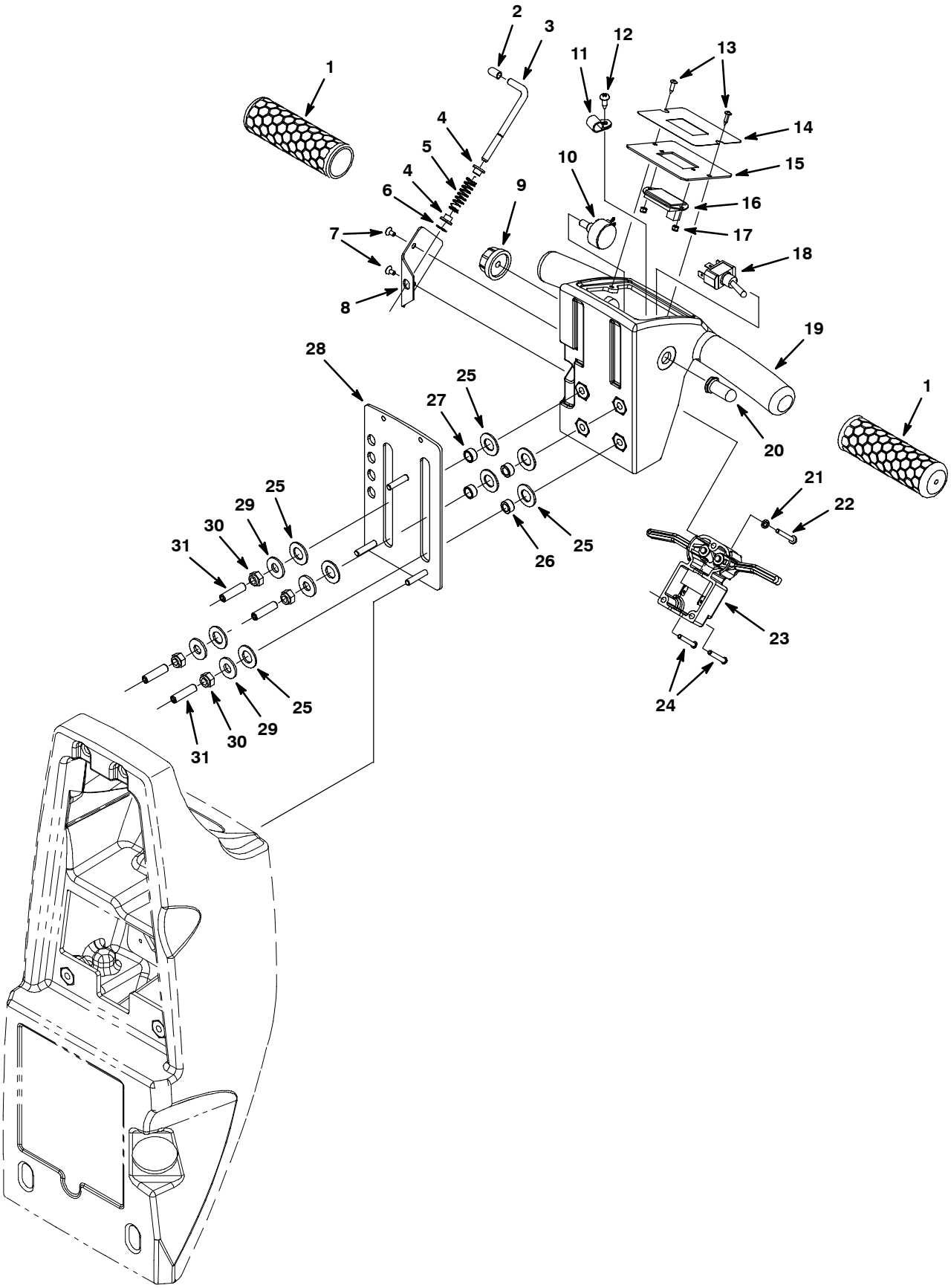

UPPER CONTROL CONSOLE GROUP, DRIVE MODEL

Ref.	Part No.	Serial Number	Description	Qty.
1	1026407	(80000000-)●	Grip, Handle, 31.75mm Dia. X 117mm L	2
2	630094	(80000000-)●	Cap, Vinyl, 2.26 Id X 12.7lg, Blk	1
3	630081	(80000000-)	Lever, Latch, Console Adjust	1
4	630083	(80000000-)	Bushing, Latch	2
5	630082	(80000000-)	Spring, Cmpr, 0.42od .04wir 01.8l, Pl,Mw	1
6	630084	(80000000-)	Ring, Retaining, Ext, 4.62mm, [E-Ring]	1
7	630114	(80000000-)	Screw, Flt, M4 X 0.7 X 8, 4.8	2
8	630087	(80000000-)	Plate, Latch, Retainer	1
9	1028037	(80000000-)●	Knob, 1.25d	1
10	1042687	(80000000-)●	Harness, Pot, Wire Assy [45k Ohm]	1
11	140328	(80000000-)	Clamp, Cable, Nyl, 0.38d, Blk	1
12	1009324	(80000000-)	Screw, Pan, #10-16 X 0.50,Phl,Blk[Ty-17]	1
13	140825	(80000000-)	Screw, Pan, #06 X 0.50, Phl, Blk,Fmg[Ab]	2
14	1031582	(80000000-)	Label, Panel, Cntrl, Upper	1
15	1031162	(80000000-)●	Panel, Cntrl, Upper, Battery Indicator	1
16	392894	(80000000-)●	Gauge, Discharge, Battery, 36vdc, Rt,Led	1
17	579211	(80000000-)	Nut, Hex, Lock, M3 X 0.50, Ss	2
18	601108	(80000000-)●	Switch, Toggle, Mom / On / On	1
19	1031000	(80000000-)	Console, Upper, Rm-Spg, Trimmmed (Ss3)	1
20	130753	(80000000-)●	Boot, Switch 1.00l Blk	1
21	02938	(80000000-)	Washer, Lock, Int, #08, Ss	1
22	33931	(80000000-)	Screw, Pan, Phl, M4 X 0.70 X 30, Ss	1
23	1031864	(80000000-)●	Controlbox, Assy, Trigger	1
24	1032889	(80000000-)	Screw, Pan, #8-18 X 1.12, F/ Plstc	2
25	608562	(80000000-)	Washer, Flat, 0.51b 0.94d .06, Nyl	8
26	607783	(80000000-)	Bearing, Sleeve, .31id X .50od X .25,Bnz	2
27	630259	(80000000-)	Bearing, 9.5id 12.7od 6.4l,Brz	2
28	1030879	(80000000-)	Plate, Slide, Console [Ss3]	1
29	01685	(80000000-)	Washer, Flat, 0.38b 0.88d .08, Ss	4
30	08709	(80000000-)	Nut, Hex, Lock, M8 X 1.25, Nl	4
31	1032057	(80000000-)	Screw, Set, M8x1.25x30, W/Patch	4

● RECOMMENDED STOCK ITEMS

LOWER CONTROL CONSOLE GROUP, DRIVE MODEL

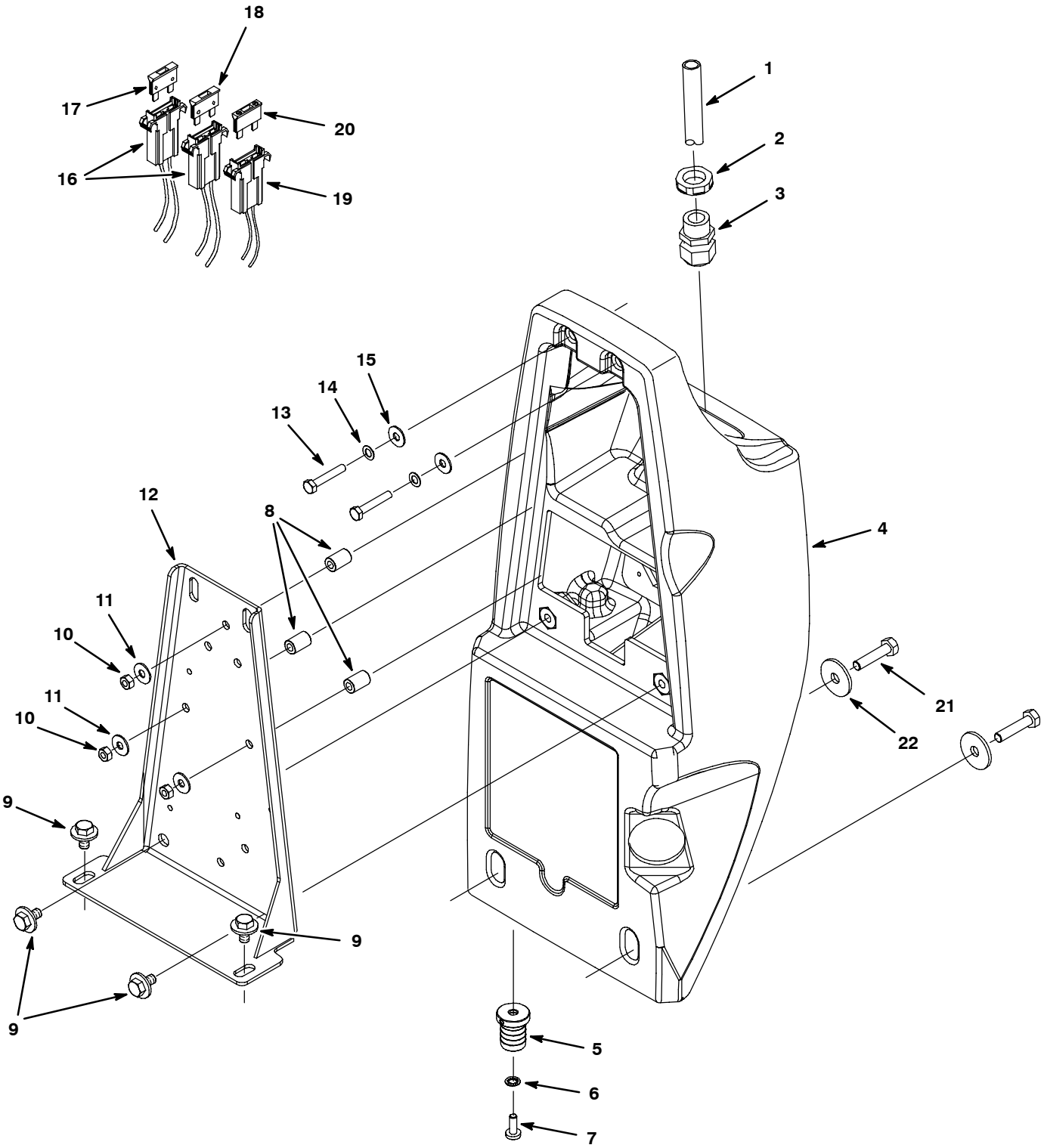

LOWER CONTROL CONSOLE GROUP, DRIVE MODEL

	Ref.	Part No.	Serial Number		Description	Qty.
	1	1032325	(80000000–	)	Harness, Wire, Console, Drive [Ss3]	1
	2	140638	(80000000–	)	Nut, Hex, Pf08, Blk Nyl [Conduit]	1
	3	130181	(80000000–	)●	Grip, Cord, Strainrelief, .50npt	1
	4	1031071	(80000000–	)	Console, Lower, Rm–Spg, Trimmed [Ss3]	1
	5	1035469	(80000000–	)	Fitting, Plstc, Bm12 [Sight Tube]	1
	6	07515	(80000000–	)	Washer, Lock, Int, 0.25 Ss	1
	7	367770	(80000000–	)	Screw, Pan, M6 X 1.0 X 16, Ss	1
	8	1031025	(80000000–	)	Bushing, Sleeve, 6.5mmb 12mmd 18mml	3
	9	1020341	(80000000–	)	Screw, Hex, M8 X 1.25 X 20, Ss, Sems	4
	10	41359	(80000000–	)	Nut, Hex, Std, M6 X 1.00, 8	3
	11	01684	(80000000–	)	Washer,Flat 0.25, Ss	3
	12	1012011	(80000000–	)	Bracket, Hsng, Cntrl	1
	13	07805	(80000000–	)	Screw, Hex, M6 X 1.0 X 35, Ss	2
	14	07515	(80000000–	)	Washer, Lock, Int, 0.25, Ss	2
	15	01684	(80000000–	)	Washer,Flat 0.25, Ss	2
∇	16	1040310	(80000000–	)●	Harness, Main, Drive [Ss3]	1
▲	17	1016040	(80000000–	)●	Fuse, 025a 032vdc	1
▲	18	1016041	(80000000–	)●	Fuse, 030a 032vdc	1
∇	19	1013644	(80000000–	)●	Harness [Fast Option] (Fast Model)	1
▲	20	1016039	(80000000–	)●	Fuse, 007.5a 032vdc (Fast Model)	1
∇	19	1045924	(80002319–	)●	Harness Assy, Wire [T3e Ec–H2o, P3] (ec-H2O Model)	1
▲	20	1047470	(80002319–	)●	Fuse, 10 Amp (ec-H2O Model)	1
	21	59658	(80000000–	)	Screw, Hex, M8 X 1.25 X 35, Ss, Nl	2
	22	1016331	(80000000–	)	Washer, Flat, 0.34b 1.25d .11, Ss	2

∇ ASSEMBLY

▲ INCLUDED IN ASSEMBLY

● RECOMMENDED STOCK ITEMS

COMPONENT PANEL GROUP, DRIVE MODEL

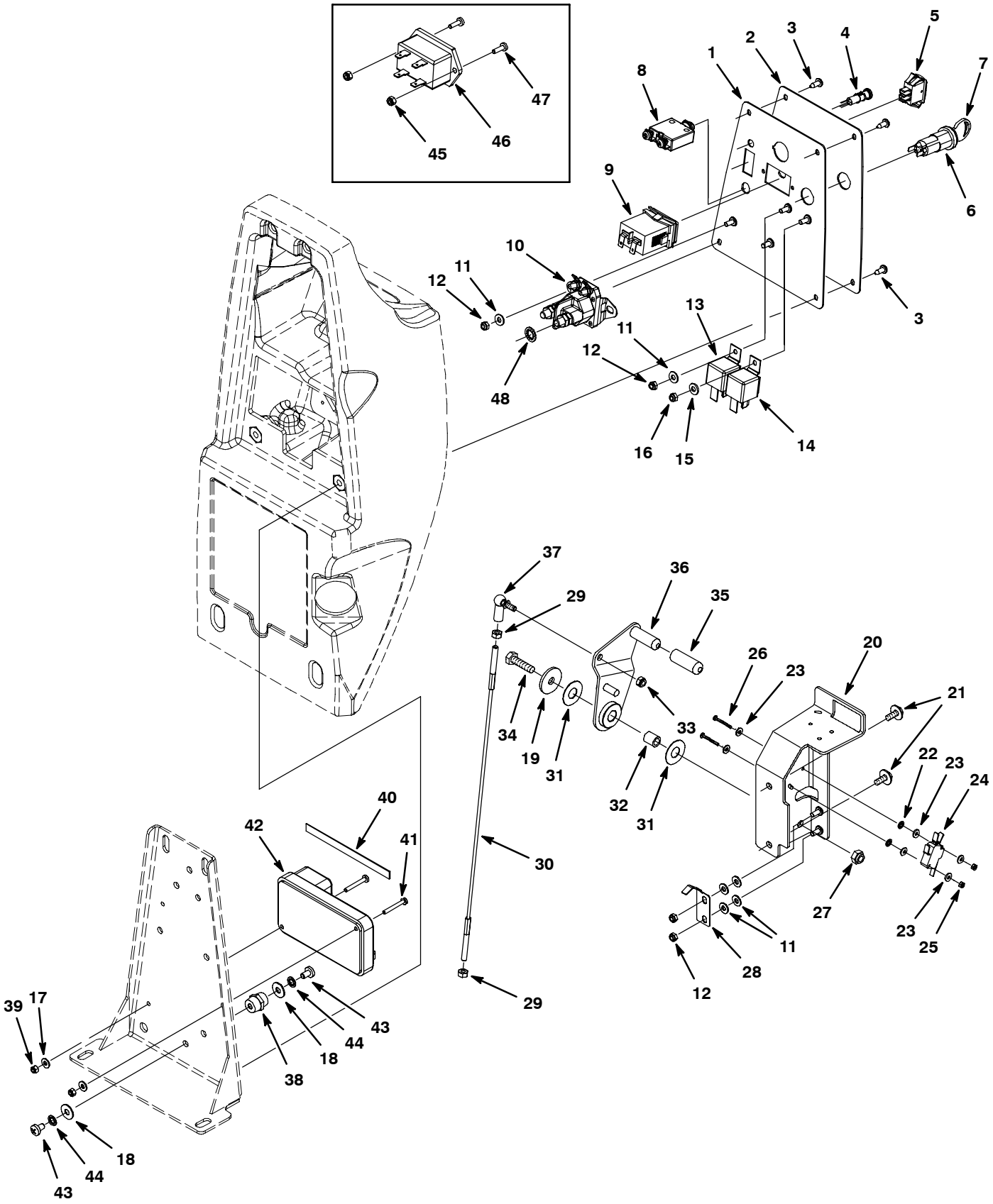

COMPONENT PANEL GROUP, DRIVE MODEL

	Ref.	Part No.	Serial Number		Description	Qty.
	1	1012134	(80000000-	)	Panel, Cntrl, Lower	1
	2	1016628	(80000000-	)	Label, Panl, Instmt, Lower [T3/T3e/Ss3]	1
	2	1049998	(80002319-	)	Label, Console, Lower Ec-H2o [T3 Na/Aej]	1
	3	1009324	(80000000-	)	Screw, Pan, #10-16 X 0.50,Phl,Blk[Ty-17]	4
	4	1041822	(80002319-	)●	Light, Panel, Mgt, .312" Dia. (ec-H2O Model)	1
	5	130787	(80000000-	)●	Switch, Rocker, Spdt (Fast & ec-H2O Model)	1
∇	6	1011402	(80000000-	)●	Switch, Key	1
▲	7	1017696	(80000000-	)●	Key Set, Replmt [F/ Keyswitch 1011402]	1
	8	1035339	(80000000-	)●	Circuitbreaker, 37.0a	1
	9	1011282	(80002319-	)●	Gauge, Hourmeter, 12/60 Vdc [Ret Mount]	1
	10	1038490	(80000000-	)●	Relay, 24vdc, 100a, No [Trombetta]	2
	11	01683	(80000000-	)	Washer, Flat, #10, Ss	7
	12	09739	(80000000-	)	Nut, Hex, Lock, M5 X 0.80, Nl, Ss	4
	13	1012216	(80000000-	)●	Relay, 24vdc, 070a, Spst No, Plug-In	1
	14	1012216	(80000000-	)●	Relay, 24vdc, 070a, Plug-In (Fast & ec-H2O Model)	1
	15	01683	(80000000-	)	Washer, Flat, #10, Ss (Fast & ec-H2O Model)	1
	16	09739	(80000000-	)	Nut, Hex, Lock, M5 X 0.80, Nl (Fast & ec-H2O Model)	1
	17	41579	(80000000-	)	Washer, Flat, #08, Ss	2
	18	01684	(80000000-	)	Washer, Flat, 0.27b 0.69d .05, Ss	2
	19	1016331	(80000000-	)	Washer, Flat, 0.34b 1.25d .11, Ss	1
	20	1012850	(80000000-	)	Bracket Wldt, Lever, Sqge	1
	21	1034731	(80000000-	)	Screw, Hex, M6 X 1.00 X 16, Sems, Ss	2
	22	02938	(80000000-	)	Washer, Lock, Int, 08, Ss	2
	23	41578	(80000000-	)	Washer, Flat, #06, Ss	6
	24	1012568	(80000000-	)	Switch, Snap, 10a, Short	1
	25	579211	(80000000-	)	Nut, Hex, Lock, M3 X 0.50, Ss	2
	26	1042062	(80000000-	)	Screw, Hex, M3 X 0.5 X 25, Ss	2
	27	08713	(80000000-	)	Nut, Hex, Lock, M8 X 1.25, Nl, Ss	1
	28	1015459	(80000000-	)	Spring, Lever, Sqge	1
	29	07785	(80000000-	)	Nut, Hex, Std, M6 X 1.00, A2, Ss	2
	30	1013479	(80000000-	)	Cable, Glv 3.18mmd 0412l M06/ M06	1
	31	1013397	(80000000-	)	Washer, Flat, M13 X 30 X 0.8, Nyl	2
	32	1014336	(80000000-	)	Sleeve, P/M, 8.40b 12.60d 14.5l, Pl	1
	33	08712	(80000000-	)	Nut, Hex, Lock, M6 X 1.00, Ss, Nl	1
	34	09011	(80000000-	)	Screw, Hex, M8 X 1.25 X 30, Ss	1
	35	1016895	(80000000-	)●	Cap, Handle, Sqge Lift	1
	36	1013329	(80000000-	)	Lever Wldt, Sqge	1
	37	1012747	(80000000-	)	Balljoint, M06 X 1.0 Fem, M06 X 1.0 Mal	1
	38	1013523	(80000000-	)●	Stand-Off, Wir, M6, 18 Hex, 20l, Insul	1
	39	33932	(80000000-	)	Nut, Hex, Lock, M4 X 0.70, Nl, Ss	2
	40	1020280	(80000000-	)●	Seal, Afmkt, Rbr, Clsd, Adh, 01ft (C410217)	1
	41	33931	(80000000-	)	Screw, Pan, M4 X 0.7 X 30, Ss	2
	42	1010905	(80000000-	)●	Module, Drive	1
	43	48732	(80000000-	)	Screw, Pan, M6 X 1.0 X 10, Ss	2
	44	07515	(80000000-	)	Washer, Lock, Int, 0.25, Ss	2
	45	579211	(80000000-80002318	)	Nut, Hex, Lock, M3 X 0.50, Ss	2
	46	1014572	(80000000-80002318	)●	Gauge, Hourmeter, 14-48vdc, Lcd, Rt,.1hr	1
	47	06920	(80000000-80002318	)	Screw, Pan, M3 X 0.50 X 10, 4.8	2
	48	43952	(80000000-	)	Washer, Lock, Int, 0.31, Ss	1

∇ ASSEMBLY

▲ INCLUDED IN ASSEMBLY

● RECOMMENDED STOCK ITEMS

WHEEL GROUP, BRUSH ASSIST MODEL

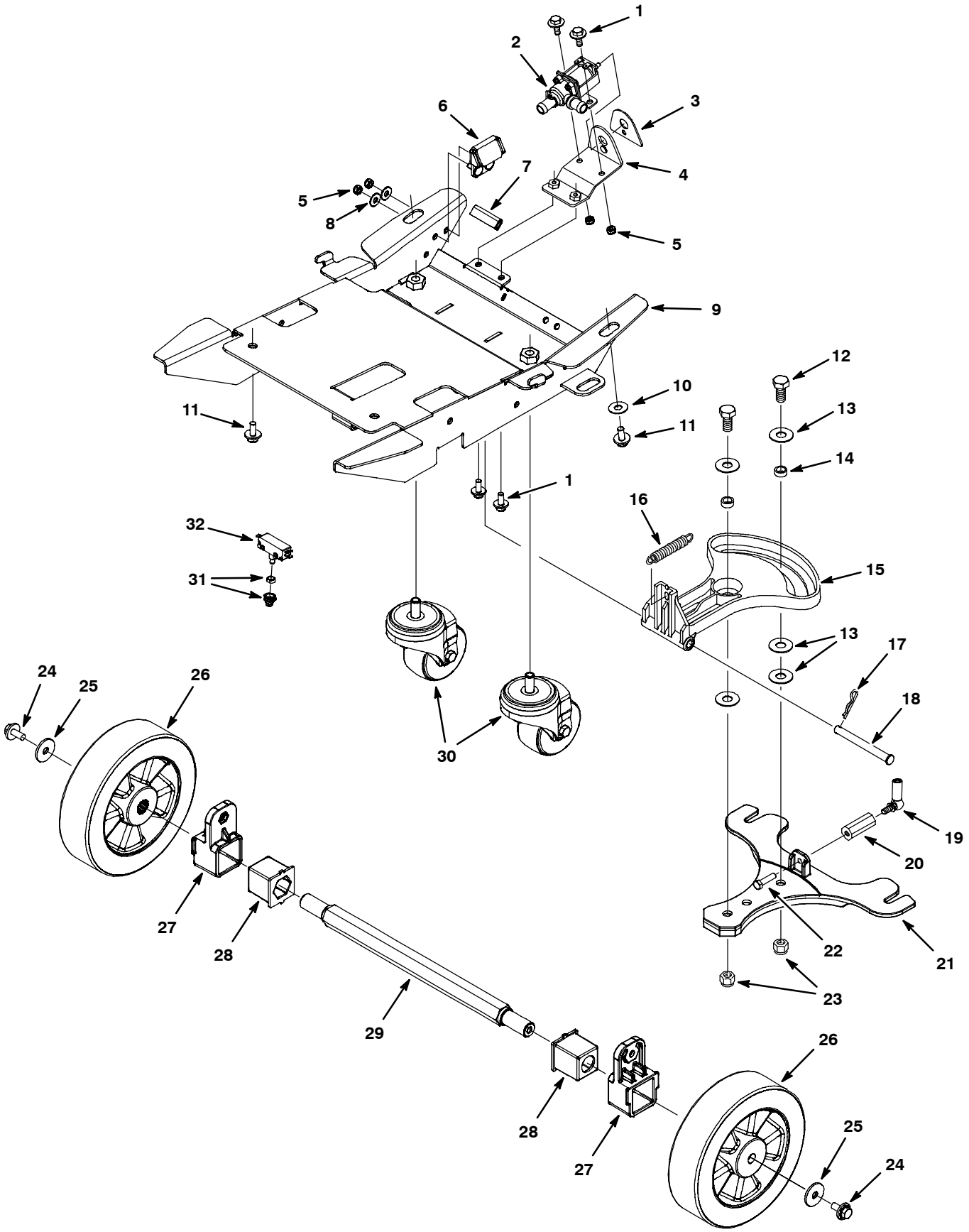

WHEEL GROUP, BRUSH ASSIST MODEL

Ref.	Part No.	Serial Number	Description	Qty.
1	1034731	(80000000–)	Screw, Hex, M6 X 1.00 X 16, Ss, Sems	4
2	1016595	(80000000–)●	Valve, 1/4–20 [Liq Dispensing]	1
3	1014156	(80000000–)	Label, Opertnl, Lower, Soltn Flow	1
4	1037292	(80000000–)	Bracket, Mtg, Valve, Soltn [Ss3]	1
5	08712	(80000000–)	Nut, Hex, Lock, M6 X 1.0, Ss, Nl	4
6	1013946	(80000000–)	Bracket, Locking, Pedal, Foot Ylw	1
7	1034551	(80000000–)	Trim, Plstc, Edge, .12 X .56 X 1.75	1
8	01684	(80000000–)	Washer, Flat, 0.25 Ss	2
9	1023428	(80000000–)	Frame Wldt, Mach, Blk	1
10	1016331	(80000000–)	Washer, Flat, 0.34b 1.25d .11, Ss	2
11	1020341	(80000000–)	Screw, Hex, M8 X 1.25 X 20, Ss, Sems	4
12	12309	(80000000–)	Screw, Hex, M12 X 1.75 X 30, Ss	2
13	140045	(80000000–)	Washer, Flat, 0.51b 1.25d .06, Ss	5
14	1013662	(80000000–)	Bushing, Sleeve, 12mm 16mm 6.5mml, Pm Yw	2
15	1023389	(80000000–)	Bracket, Sqge, Lift, Mold Blk, Nyl	1
16	1008721	(80000000–)	Spring, Extn, 0.75od 0.09wir 03.5l	1
17	44906	(80000000–)	Pin, Cotter, Hair, 0.69d .092 Wir	1
18	1013610	(80000000–)	Pin, Clevis, 10mmd X 100mml	1
19	1012747	(80000000–)	Balljoint, M6 X 1.0 Fem, M6 X 1.0 Mal	1
20	1002078	(80000000–)	Spacer, 0.50hex X 1.25l, M6 Thread	1
21	1026265	(80000000–)	Bracket, Mtg, Sqge, Cast, Alm	1
1034731 22	~~1034741~~	(80000000–)	Screw, Hex, .31–18 X 1.25, Ss, Nl	1
23	09741	(80000000–)	Nut, Hex, Lock, M12 X 1.75, Nl, Ss	2
24	1020341	(80000000–)	Screw, Hex, M8 X 1.25 X 20, Ss, Sems	2
25	1016331	(80000000–)	Washer, Flat, 0.34b 1.25d .11, Ss	2
26	1013248	(80000000–)●	Wheel, Scrbr, 198.00 Mm With Bearing	2
27	1028292	(80000000–)	Adapter, Mtg, Axle, Alm	2
28	1028381	(80000000–)	Grommet, Axle	2
29	1028382	(80000000–)●	Axle, Wheel, Hex, Clr Zn	1
30	1026345	(80000000–)●	Caster, Swivel, 80mm D, M12 X 25 Stem	2
31	1035711	(80000000–)●	Boot, Switch, Hex Nut, .38–32 Thd	1
32	606292	(80000000–)●	Switch, Push, Actuator, 20a	1

● RECOMMENDED STOCK ITEMS–

WHEEL GROUP, DRIVE MODEL (S/N 80001782-)

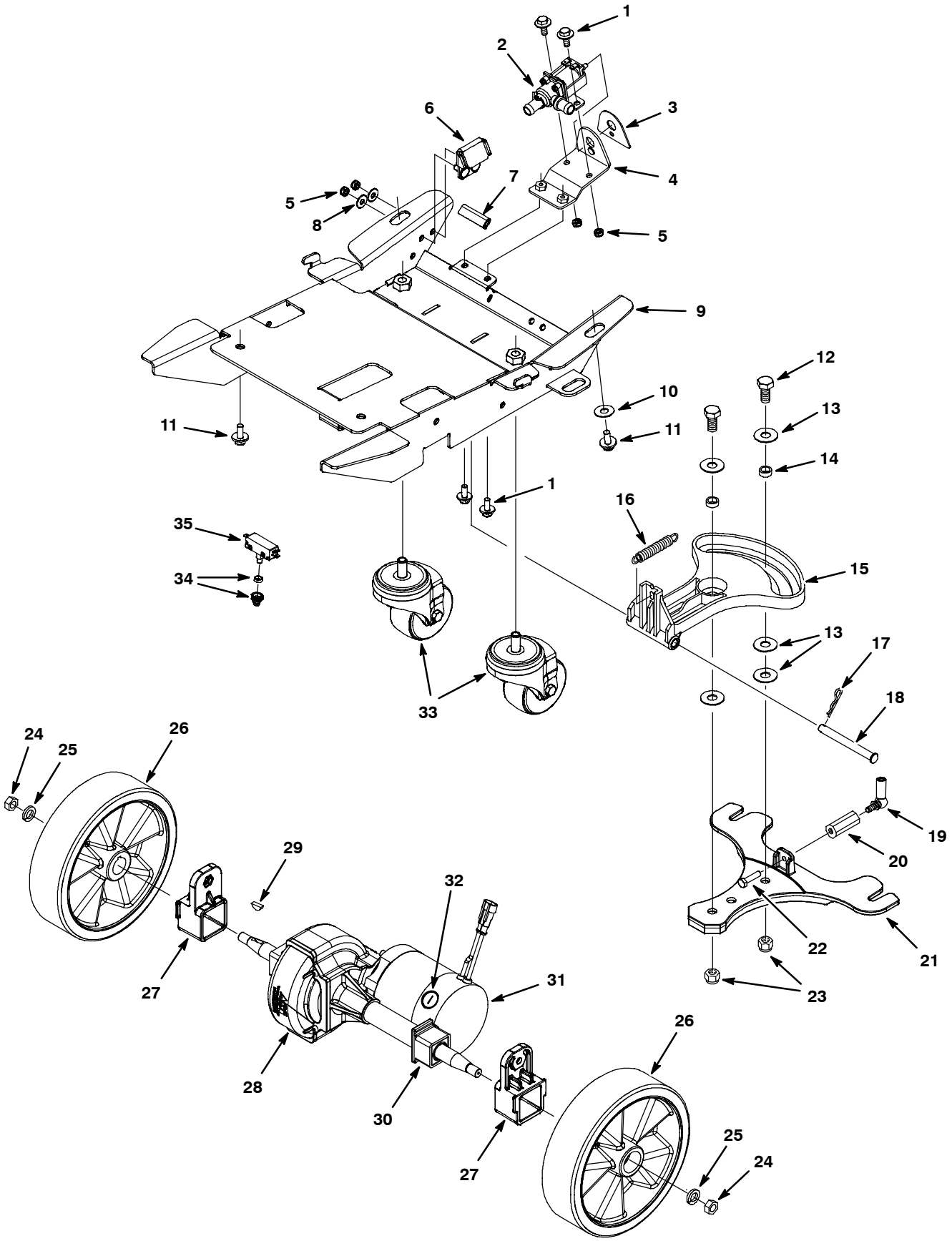

WHEEL GROUP, DRIVE MODEL (S/N 80001782-)

	Ref.	Part No.	Serial Number		Description	Qty.
	1	1034731	(80000000-	)	Screw, Hex, M6 X 1.00 X 16, Ss, Sems	4
	2	1016595	(80000000-	)●	Valve, 1/4-20 [Liq Dispensing]	1
	3	1014156	(80000000-	)	Label, Opertnl, Lower, Soltn Flow	1
	4	1037292	(80000000-	)	Bracket, Mtg, Valve, Soltn	1
	5	08712	(80000000-	)	Nut, Hex, Lock, M6 X 1.0, Ss, Nl	4
	6	1013946	(80000000-	)	Bracket, Locking, Pedal, Foot Ylw	1
	7	1034551	(80000000-	)	Trim, Plstc, Edge, .12 X .56 X 1.75	1
	8	01684	(80000000-	)	Washer, Flat, 0.25 Ss	2
	9	1023428	(80000000-	)	Frame Wldt, Mach, Blk	1
	10	1016331	(80000000-	)	Washer, Flat, 0.34b 1.25d .11, Ss	2
	11	1020341	(80000000-	)	Screw, Hex, M8 X 1.25 X 20, Ss, Sems	4
	12	12309	(80000000-	)	Screw, Hex, M12 X 1.75 X 30, Ss	2
	13	140045	(80000000-	)	Washer, Flat, 0.51b 1.25d .06, Ss	5
	14	1013662	(80000000-	)	Bushing, Sleeve, 12mm 16mm 6.5mml, Pm Yw	2
	15	1023389	(80000000-	)	Bracket, Sqge, Lift, Mold Blk, Nyl	1
	16	1008721	(80000000-	)	Spring, Extn, 0.75od 0.09wir 03.5l	1
	17	44906	(80000000-	)	Pin, Cotter, Hair, 0.69d .092 Wir	1
	18	1013610	(80000000-	)	Pin, Clevis, 10mmd X 100mml	1
	19	1012747	(80000000-	)●	Balljoint, M6 X 1.0 Fem, M6 X 1.0 Mal	1
	20	1002078	(80000000-	)	Spacer, 0.50hex X 1.25l, M6 Thread	1
	21	1026265	(80000000-	)	Bracket, Mtg, Sqge, Cast, Alm	1
1034731	22	~~1034741~~	(80000000-	)	Screw, Hex, .31-18 X 1.25, Ss, Nl	1
	23	09741	(80000000-	)	Nut, Hex, Lock, M12 X 1.75, Nl, Ss	2
	24	07788	(80001782-	)	Nut, Hex, Std, M12 X 1.75, Ss	2
	25	140024	(80001782-	)	Washer, Lock, Split, 0.50, Ss	2
	26	1039655	(80001782-	)●	Wheel, Scrbr, 198.00mm, W/ Taper [T3]	2
	27	1028292	(80000000-	)	Adapter, Mtg, Axle, Alm	2
∇	28	1039475	(80001782-	)●	Transaxle, Ele, 24vdc, 112rpm, Pkrd,Dfma	1
▲		1017782	(80000000-	)●	Coupling Kit, Transaxle, Replmt [11057]	1
▲	29	1021167	(80001782-	)	Key, Woodruff, 5mm	2
▲	30	612880	(80000000-	)●	Sleeve, Transaxle, Replmt	2
▲∇	31	1019916	(80000000-	)●	Motor, Transaxle, 24vdc, Replmt	1
▲▲	32	614166	(80000000-	)●	Brush Kit, Carbon [Qty 4]	1
	33	1026345	(80000000-	)●	Caster, Swivel, 80mm D, M12 X 25 Stem	2
	34	1035711	(80000000-	)●	Boot, Switch, Hex Nut, .38-32 Thd	1
	35	606292	(80000000-	)●	Switch, Push, Actuator, 20a	1
	N/S	130773	(80000000-	)	Tie, Cable, Nyl, 11.0l, .14w, 3.0 Max. D	4
	N/S	1019397	(80000000-	)●	Harness, Frame, Drive	1

∇ ASSEMBLY

▲ INCLUDED IN ASSEMBLY

● RECOMMENDED STOCK ITEMS

WHEEL GROUP, DRIVE MODEL (S/N 80000000-80001781)

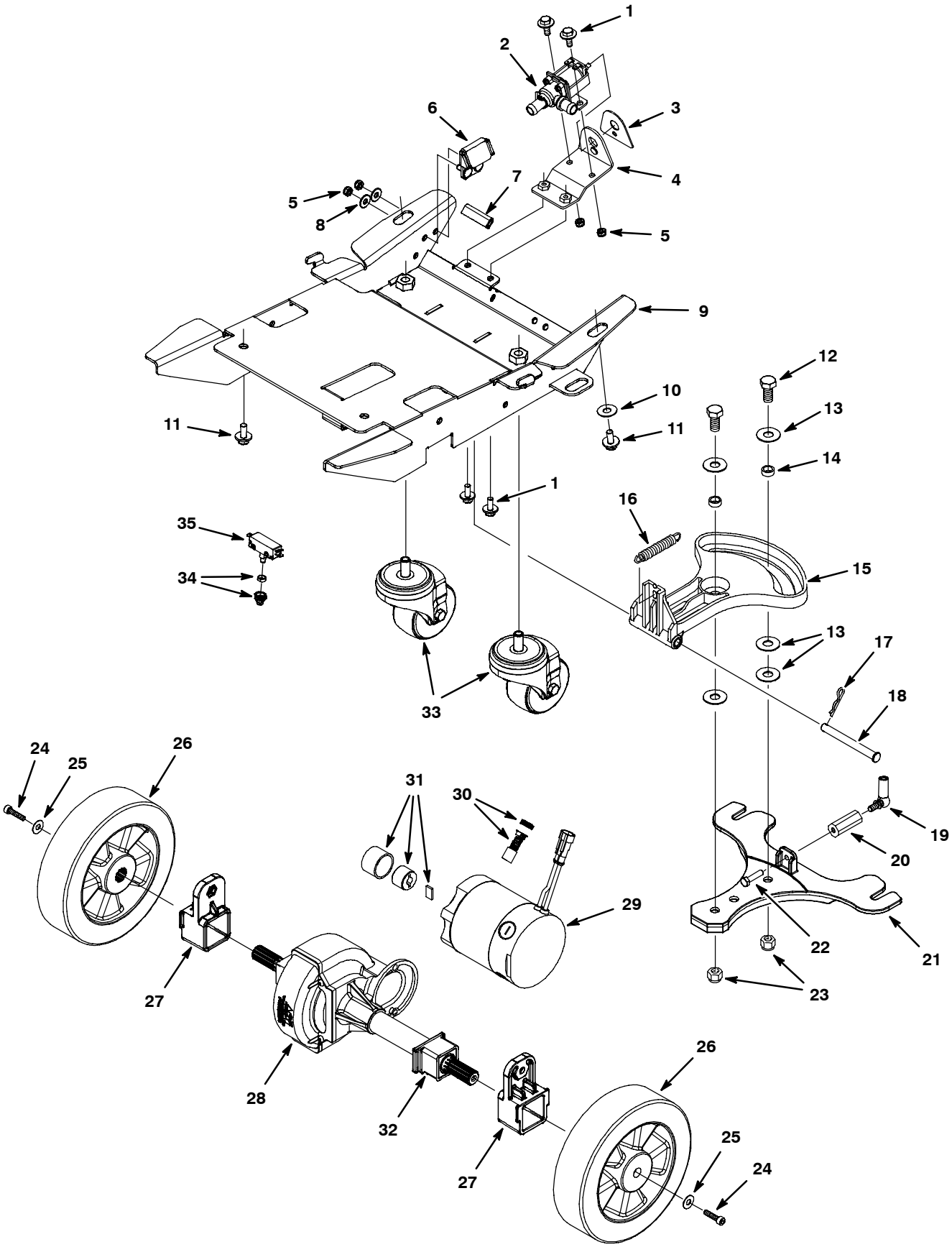

WHEEL GROUP, DRIVE MODEL (S/N 80000000-80001781)

	Ref.	Part No.	Serial Number		Description	Qty.
	1	1034731	(80000000-	)	Screw, Hex, M6 X 1.00 X 16, Ss, Sems	4
	2	1016595	(80000000-	)●	Valve, 1/4-20 [Liq Dispensing]	1
	3	1014156	(80000000-	)	Label, Opertnl, Lower, Soltn Flow	1
	4	1037292	(80000000-	)	Bracket, Mtg, Valve, Soltn	1
	5	08712	(80000000-	)	Nut, Hex, Lock, M6 X 1.0, Ss, Nl	4
	6	1013946	(80000000-	)	Bracket, Locking, Pedal, Foot Ylw	1
	7	1034551	(80000000-	)	Trim, Plstc, Edge, .12 X .56 X 1.75	1
	8	01684	(80000000-	)	Washer, Flat, 0.25 Ss	2
	9	1023428	(80000000-	)	Frame Wldt, Mach, Blk	1
	10	1016331	(80000000-	)	Washer, Flat, 0.34b 1.25d .11, Ss	2
	11	1020341	(80000000-	)	Screw, Hex, M8 X 1.25 X 20, Ss, Sems	4
	12	12309	(80000000-	)	Screw, Hex, M12 X 1.75 X 30, Ss	2
	13	140045	(80000000-	)	Washer, Flat, 0.51b 1.25d .06, Ss	5
	14	1013662	(80000000-	)	Bushing, Sleeve, 12mm 16mm 6.5mml, Pm Yw	2
	15	1023389	(80000000-	)	Bracket, Sqge, Lift, Mold Blk, Nyl	1
	16	1008721	(80000000-	)	Spring, Extn, 0.75od 0.09wir 03.5l	1
	17	44906	(80000000-	)	Pin, Cotter, Hair, 0.69d .092 Wir	1
	18	1013610	(80000000-	)	Pin, Clevis, 10mmd X 100mml	1
	19	1012747	(80000000-	)●	Balljoint, M6 X 1.0 Fem, M6 X 1.0 Mal	1
	20	1002078	(80000000-	)	Spacer, 0.50hex X 1.25l, M6 Thread	1
	21	1026265	(80000000-	)	Bracket, Mtg, Sqge, Cast, Alm	1
	22	11329	(80000000-	)	Screw, Hex, M6 X 1.0 X 16, Ss, Nl	1
	23	09741	(80000000-	)	Nut, Hex, Lock, M12 X 1.75, Nl, Ss	2
	24	1015869	(80000000-80001781	)	Screw, Soc, M6 X 1.0 X 25, Ss, Nl	2
	25	200304017	(80000000-80001781	)	Washer, Flat, M6.4b X 13d X 1.6, Pl	2
	26	1015079	(80000000-80001781	)●	Wheel, Scrbr, 198.00mm [W/ Spline)	2
	27	1028292	(80000000-	)	Adapter, Mtg, Axle, Alm	2
∇	28	1028379	(80000000-80001781	)●	Transaxle, Ele, 24vdc, 112rpm, Pkrd,Dfma	1
▲∇	29	1019916	(80000000-	)●	Motor, Transaxle, 24vdc, Replmt	1
▲▲	30	614166	(80000000-	)●	Brush Kit, Carbon [Qty 4]	1
▲	31	1017782	(80000000-	)●	Coupling Kit, Transaxle, Replmt [11057]	1
▲	32	612880	(80000000-	)●	Sleeve, Transaxle, Replmt	2
	33	1026345	(80000000-	)●	Caster, Swivel, 80mm D, M12 X 25 Stem	2
	34	1035711	(80000000-	)●	Boot, Switch, Hex Nut, .38-32 Thd	1
	35	606292	(80000000-	)●	Switch, Push, Actuator, 20a	1
	N/S	130773	(80000000-	)	Tie, Cable, Nyl, 11.0l, .14w, 3.0 Max. D	4
	N/S	1019397	(80000000-	)●	Harness, Frame, Drive	1

∇ ASSEMBLY

▲ INCLUDED IN ASSEMBLY

● RECOMMENDED STOCK ITEMS

SCRUB HEAD GROUP, 43 cm (17 in) MODEL

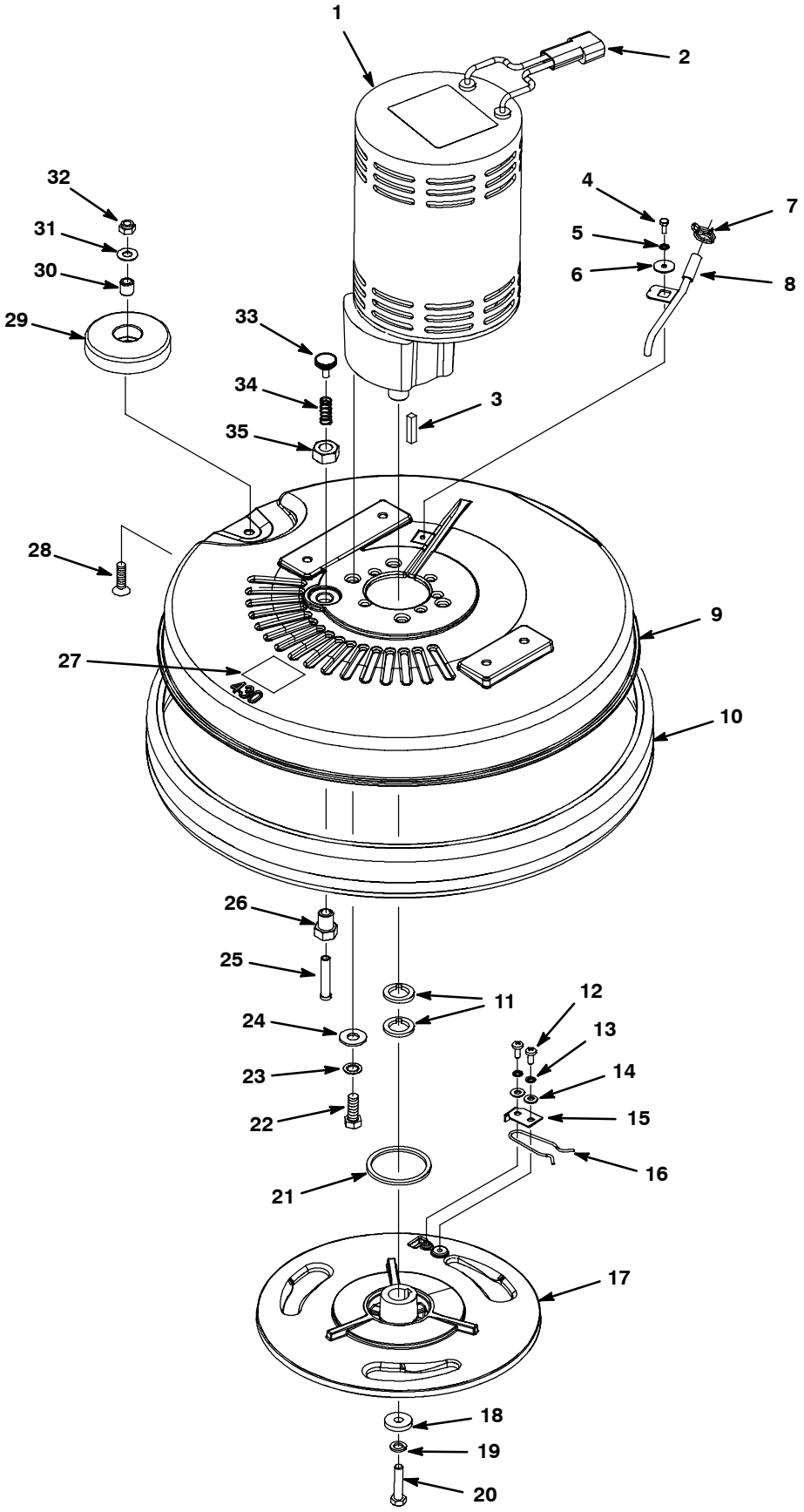

SCRUB HEAD GROUP, 43 cm (17 in) MODEL

	Ref.	Part No.	Serial Number		Description	Qty.
∇	1	1039494	(80000000-	)●	Motor, Ele, 24vdc 0200rpm 1.00hp Gear	1
▲	1	1045790	(80000000-	)●	Brush Kit, Replmt, Carbon 24vdc [4pc = 1kit]	1
▲	2	607798	(80000000-	)●	Terminal Mal Brush Motor Leads	2
▲	2	607801	(80000000-	)●	Clip, Position, Terminal [Packard]	1
	3	00930	(80000000-	)●	Key, Sq, 0.25 X 0.25, 1.50l	1
	4	1020234	(80000000-	)	Screw, Hex, M4 X 0.7 X 10, Ss	1
	5	02938	(80000000-	)	Washer, Lock, Int, 08, Ss	1
	6	1009168	(80000000-	)	Washer, Flat, 0.17b 0.75d .04, Ss	1
	7	607775	(80000000-	)	Clamp, Hose, Wir, .63 - .66, Blk	1
	8	1016155	(80000000-	)	Tube Wldt, Supply, Water	1
	9	1048186	(80000000-	)	Housing, Head, 43cm [Die Cast]	1
	10	1011368	(80000000-	)●	Bumper, Head, 43cm, W/ Bristle Skirt	1
	11	621471	(80000000-	)	Spacer, 0.75b 1.12d 0.12l,	2
	12	09200	(80000000-	)	Screw, Pan, M5 X 0.8 X 12, Ss	2
	13	07514	(80000000-	)	Washer, Lock, Int, #10, Ss	2
	14	01683	(80000000-	)	Washer, Flat, 0.22b 0.50d .05, Ss [#10]	2
	15	1011201	(80000000-	)●	Plate, Clamp, Brush	1
	16	1013188	(80000000-	)●	Clip, Spring, Drive Plate Yel Pl	1
	17	1036525	(80000000-	)●	Driver, Pad, 3-Lug, Alm, 19.0b[90lbs-Dp]	1
	18	1028796	(80000000-	)	Washer, Flat, 0.33b 1.00d .18	1
	19	140015	(80000000-	)	Washer, Lock, Split, 0.31, Ss	1
	20	1035038	(80000000-	)	Screw, Hex, .31-18 X 1.38, Ss, Nl	1
	21	1016426	(80000000-	)	Ring, Water, Containment	1
	22	69225	(80000000-	)	Screw, Hex, .38-16 X 1.00, Ss	4
	23	43953	(80000000-	)	Washer, Lock, Int, 0.38 Ss	4
	24	01686	(80000000-	)	Washer, Flat, 0.44b 1.00 .08, Ss	4
	25	1037399	(80000000-	)	Pin, Stop, 8.3mmd X 42mml	1
	26	605825	(80000000-	)	Screw, Stop, Head Pin	1
	27	578769	(80000000-	)	Label, Moving Parts	1
	28	79506	(80000000-	)	Screw, Flt, M8 X 1.25 X 30, Ss	1
	29	1010560	(80000000-	)●	Wheel, Bmpr, 80d X 25w, Non-Marking	1
	30	222460	(80000000-	)	Sleeve, P/M, 0.31b 0.50d 0.5l	1
	31	140027	(80000000-	)	Washer, Flat, 0.35b 0.75d .04, Ss	1
	32	08713	(80000000-	)	Nut, Hex, Lock, M8 X 1.25, Nl, Ss	1
	33	603012	(80000000-	)●	Knob, Rnd, 19.0d M6 X 12, Stud, Plstc,Pl	1
	34	1037400	(80000000-	)	Spring, Cmpr, .42od, .04wir, 1.0l, Pl,Mw	1
	35	1037470	(80000000-	)	Nut, Hex, M14 X 2.00, Ss	1

∇ ASSEMBLY

▲ INCLUDED IN ASSEMBLY

● RECOMMENDED STOCK ITEMS

SCRUB HEAD GROUP, 50 cm (20 in) MODEL

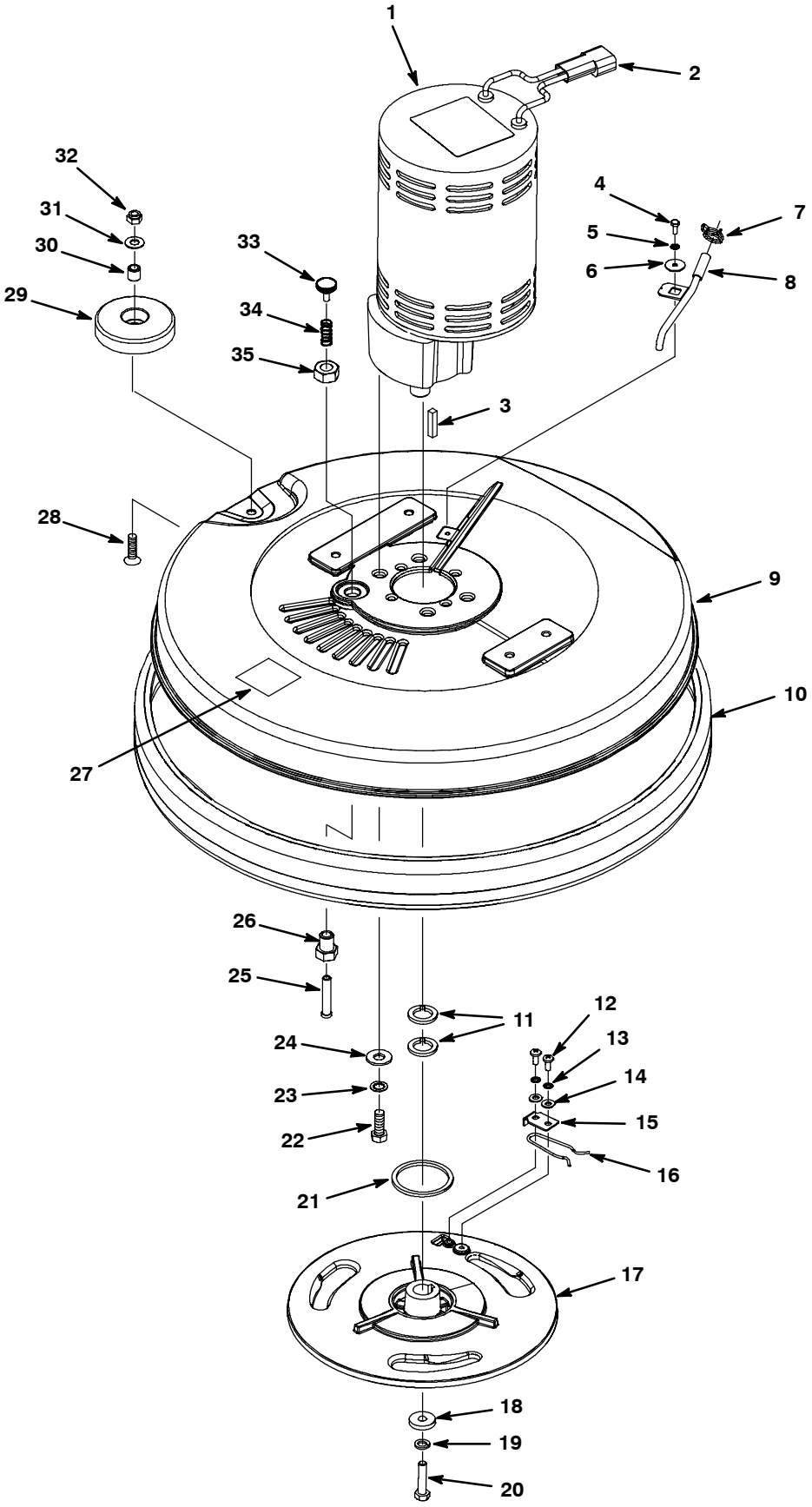

SCRUB HEAD GROUP, 50 cm (20 in) MODEL

	Ref.	Part No.	Serial Number		Description	Qty.
∇	1	1039494	(80000000-	)●	Motor, Ele, 24vdc 0200rpm 1.00hp Gear	1
▲	1	1045790	(80000000-	)●	Brush Kit, Replmt, Carbon 24vdc [4pc = 1kit]	1
▲	2	607798	(80000000-	)●	Terminal Mal Brush Motor Leads	2
▲	2	607801	(80000000-	)●	Clip, Position, Terminal [Packard]	1
	3	00930	(80000000-	)●	Key, Sq, 0.25 X 0.25, 1.50l	1
	4	1020234	(80000000-	)	Screw, Hex, M4 X 0.7 X 10, Ss	1
	5	02938	(80000000-	)	Washer, Lock, Int, 08, Ss	1
	6	1009168	(80000000-	)	Washer, Flat, 0.17b 0.75d .04, Ss	1
	7	607775	(80000000-	)	Clamp, Hose, Wir, .63 - .66, Blk	1
	8	1016155	(80000000-	)	Tube Wldt, Supply, Water	1
	9	1036813	(80000000-	)	Housing, Head, 50cm, Die Cstg	1
	10	1011316	(80000000-	)●	Bumper, Head, W/ Bristle Skirt	1
	11	621471	(80000000-	)	Spacer, 0.75b 1.12d 0.12l,	2
	12	09200	(80000000-	)	Screw, Pan, M5 X 0.8 X 12, Ss	2
	13	07514	(80000000-	)	Washer, Lock, Int, #10, Ss	2
	14	01683	(80000000-	)	Washer, Flat, 0.22b 0.50d .05, Ss [#10]	2
	15	1011201	(80000000-	)●	Plate, Clamp, Brush	1
	16	1013188	(80000000-	)●	Clip, Spring, Drive Plate Yel Pl	1
	17	1036525	(80000000-	)●	Driver, Pad, 3-Lug, Alm, 19.0b[90lbs-Dp]	1
	18	1028796	(80000000-	)	Washer, Flat, 0.33b 1.00d .18	1
	19	140015	(80000000-	)	Washer, Lock, Split, 0.31, Ss	1
	20	1035038	(80000000-	)	Screw, Hex, .31-18 X 1.38, Ss, Nl	1
	21	1016426	(80000000-	)	Ring, Water, Containment	1
	22	69225	(80000000-	)	Screw, Hex, .38-16 X 1.00, Ss	4
	23	43953	(80000000-	)	Washer, Lock, Int, 0.38 Ss	4
	24	01686	(80000000-	)	Washer, Flat, 0.44b 1.00 .08, Ss	4
	25	1037399	(80000000-	)	Pin, Stop, 8.3mmd X 42mml	1
	26	605825	(80000000-	)	Screw, Stop, Head Pin	1
	27	578769	(80000000-	)	Label, Moving Parts	1
	28	79506	(80000000-	)	Screw, Flt, M8 X 1.25 X 30, Ss	1
	29	1010560	(80000000-	)●	Wheel, Bmpr, 80d X 25w, Non-Marking	1
	30	222460	(80000000-	)	Sleeve, P/M, 0.31b 0.50d 0.5l	1
	31	140027	(80000000-	)	Washer, Flat, 0.35b 0.75d .04, Ss	1
	32	08713	(80000000-	)	Nut, Hex, Lock, M8 X 1.25, Nl, Ss	1
	33	603012	(80000000-	)●	Knob, Rnd, 19.0d M6 X 12, Stud, Plstc,Pl	1
	34	1037400	(80000000-	)	Spring, Cmpr, .42od, .04wir, 1.0l, Pl,Mw	1
	35	1037470	(80000000-	)	Nut, Hex, M14 X 2.00, Ss	1

∇ ASSEMBLY

▲ INCLUDED IN ASSEMBLY

● RECOMMENDED STOCK ITEMS

SCRUB HEAD LIFT GROUP

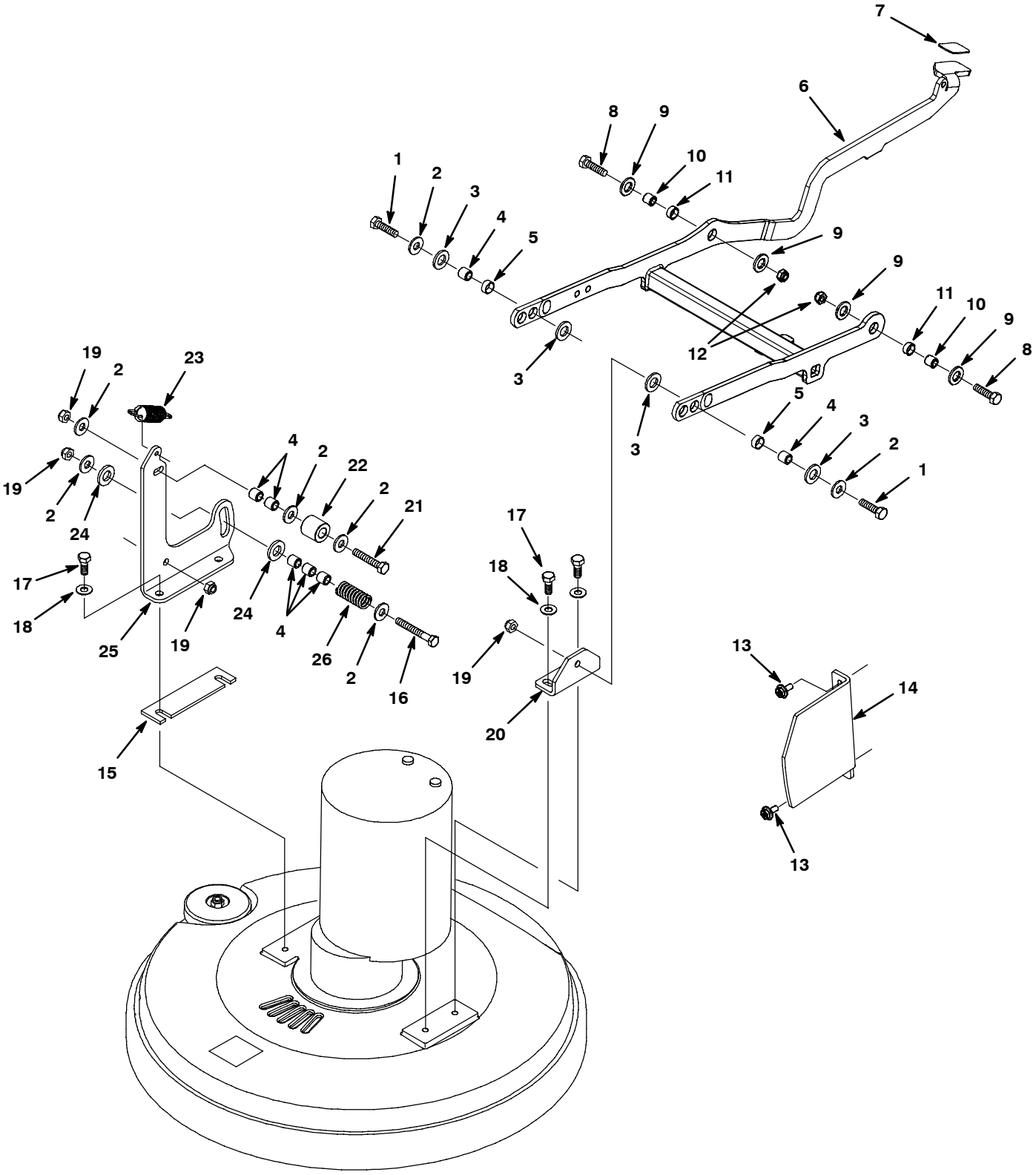

SCRUB HEAD LIFT GROUP

	Ref.	Part No.	Serial Number		Description	Qty.
	1	09011	(80000000–	)	Screw, Hex, M8 X 1.25 X 30, Ss	2
	2	01685	(80000000–	)	Washer, Flat, 0.38b 0.88d .08, Ss	7
	3	1013936	(80000000–	)	Washer, Flat, 0.51b 0.94d .10, Nyl	4
	4	222460	(80000000–	)	Sleeve, P/M, 0.31b 0.50d 0.5l	7
	5	630188	(80000000–	)	Bearing, Journal, .50id X .25l	2
∇	6	1037297	(80000000–	)	Lift Assy, Head, Sngl Disk, Aftmkt	1
▲	7	1014283	(80000000–	)●	Pad, Adh, Non-Slip, 28mm X 36mm, Blk	1
▲	8	09011	(80000000–	)	Screw, Hex, M8 X 1.25 X 30, Ss	2
▲	9	1013936	(80000000–	)	Washer, Flat, 0.51b 0.94d .10, Nyl	4
▲	10	222460	(80000000–	)	Sleeve, P/M, 0.31b 0.50d 0.5l	2
▲	11	630188	(80000000–	)	Bearing, Journal, .50id X .25l	2
▲	12	08713	(80000000–	)	Nut, Hex, Lock, M8 X 1.25, Nl, Ss	2
	13	1034731	(80000000–	)	Screw, Hex, M6 X 1.00 X 16, Sems, Ss	2
	14	1015460	(80000000–	)	Bracket, Guide, Head, [43cm]	1
	14	1012484	(80000000–	)	Bracket, Guide, Head, [50cm]	1
	15	1032791	(80000000–	)	Spacer, Head, 4mm (Brush Assist Model Only)	1
	16	1014163	(80000000–	)	Screw, Hex, M8 X 1.25 X 60, Fl, Ss	1
	17	12333	(80000000–	)	Screw, Hex, M8 X 1.25 X 25, Ss, Nl	4
	18	69461	(80000000–	)	Washer, Flat, 0.38b 0.88d .12, Stl, Pl	4
	19	08713	(80000000–	)	Nut, Hex, Lock, M8 X 1.25, Nl, Ss	4
	20	1015470	(80000000–	)	Bracket, Mtg, Head	1
	21	222505	(80000000–	)	Screw, Hex, M8 X 1.25 X 45, Ss	1
	22	1014020	(80000000–	)●	Roller, Lift, Dual Disk Head	1
	23	1032420	(80000000–	)	Spring, Extn, 0.85od 0.09wir 02.9l (43cm Model)	1
	23	1031776	(80000000–	)	Spring, Extn, 0.75od 0.09wir 03.2l (50cm Model)	1
	24	140127	(80000000–	)	Bearing, Thrust,0.51b X 1.0 X .12, Brz	2
	25	1012323	(80000000–	)	Bracket, Mtg, Head, Rh	1
	26	140430	(80000000–	)	Spring, Cmpr, .72od X 1.69 L	1
	N/S	130773	(80000000–	)	Tie, Cable, Nyl, 11.0l, .14w, 3.0 Max. D	1

∇ ASSEMBLY

▲ INCLUDED IN ASSEMBLY

● RECOMMENDED STOCK ITEMS

SOLUTION GROUP, FaST MODEL

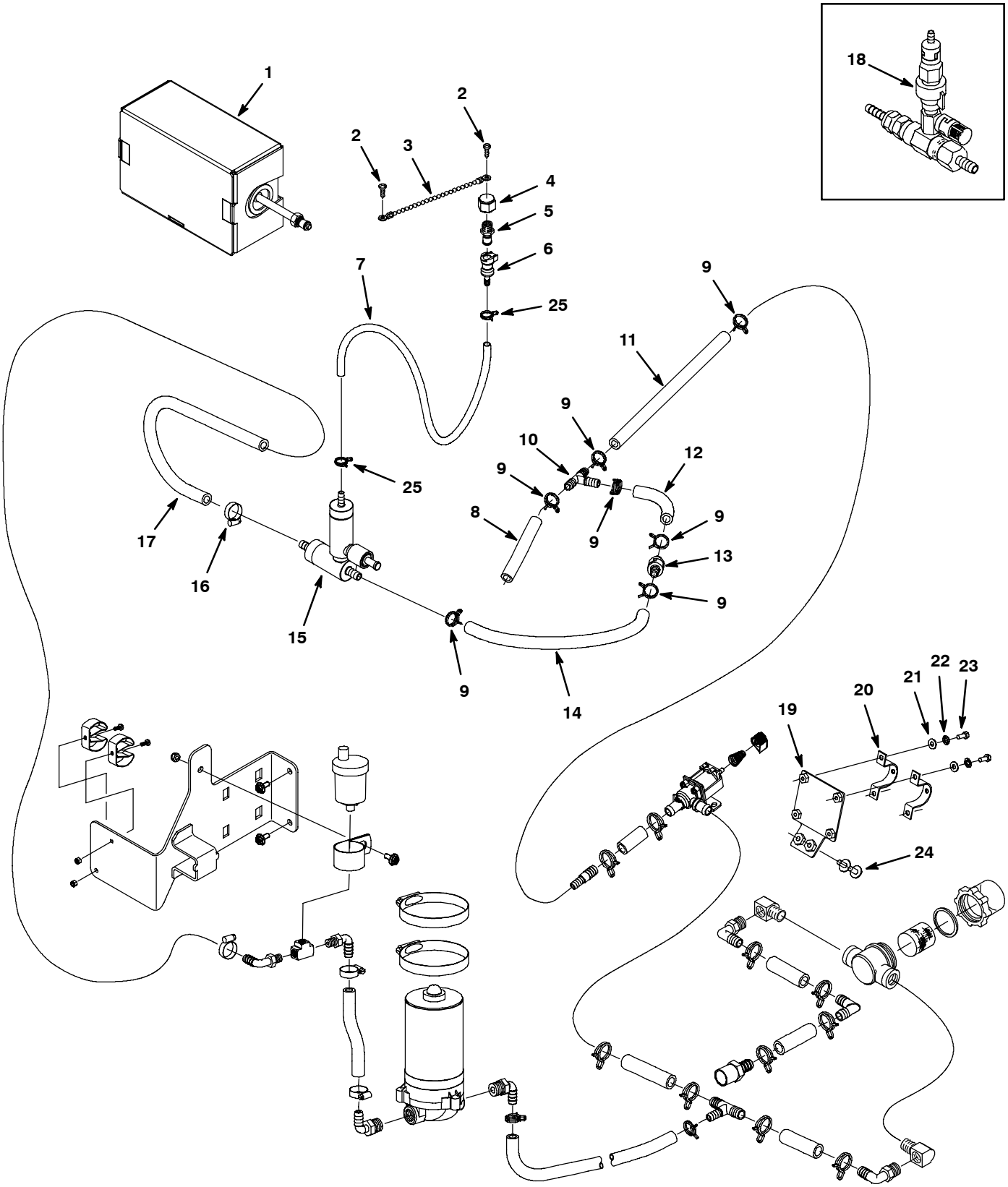

SOLUTION GROUP, FaST MODEL

Ref.	Part No.	Serial Number		Description	Qty.
1	1017019	(80000000–	)●	Detergent Pkg, 2 Liter, Sgl [Mp]	1
1	1017025	(80000000–	)●	Detergent Pkg, 2 Liter, Sgl [Mpd]	1
2	1018155	(80000000–	)	Screw, Pan, M5 X 0.8 X16, Ss, Tcut	2
3	621443	(80000000–	)	Chain, Ball, #10, 157mml, Ss	1
4	1005435	(80000000–	)	Fitting, Plstc, Cap, Pf04, Pipe	1
5	1006206	(80000000–	)	Fitting, Plstc, Str, Pm04, Cplg, Mal [Nob]	1
6	1006204	(80000000–	)●	Coupling, Fem, W/ Valve, .25 Brb [Nobles]	1
7	613947	(80000000–	)	Hose, Clr, 0.25id 26.0l	1
8	613446	(80000000–	)	Hose 3/8idx5/8od Clear 611254 Ft 0.833	1
9	607775	(80000000–	)	Clamp, Hose, Wir, .63 – .66, Blk	7
10	160310	(80000000–	)	Fitting, Plstc, Tee, Bm06/Bm06/Bm06	1
11	613451	(80000000–	)	Hose 3/8idx5/8od Clear 611254 Ft 1.000	1
12	606362	(80000000–	)	Hose 3/8idx5/8odx6.5 (611254)	1
13	1015455	(80000000–	)●	Valve, Check, 0005psi Bm06/Bm06	1
14	613442	(80000000–	)	Hose 3/8idx5/8od Clear 611254 Ft 1.292	1
15	9003906	(80001391–	)●	Fast Kit, Injector, Ci [T3/Ss3 Fast Ii+] (See Breakdowns)	1
16	54333	(80000000–	)	Clamp, Hose, Wormdrive, 0.31–0.88d, .31w	1
17	613722	(80000000–	)	Hose .38 Id X 21” Pvc Braided	1
18	9003801	(80000000–80001390	)●	Fast Kit, Conv, Ci [T3/Ss3 Fast Ii+] (See Breakdowns)	1
19	1029533	(80000000–	)	Bracket, Mtg, Fltr	1
20	605056	(80000000–	)	Bracket, Mtg, Fltr	2
21	01683	(80000000–	)	Washer, Flat, #10, Ss	4
22	07514	(80000000–	)	Washer, Lock, Int, #10, Ss	4
23	09738	(80000000–	)	Screw, Hex, M5 X 0.8 X 12, Ss	4
24	1034731	(80000000–	)	Screw, Hex, M6 X 1.00 X 16, Ss, Sems	2
25	613735	(80000000–	)	Clamp, Hose, Wir, .40 – .42, Yel	2

● RECOMMENDED STOCK ITEMS

SOLUTION GROUP, FaST MODEL - CONT'D

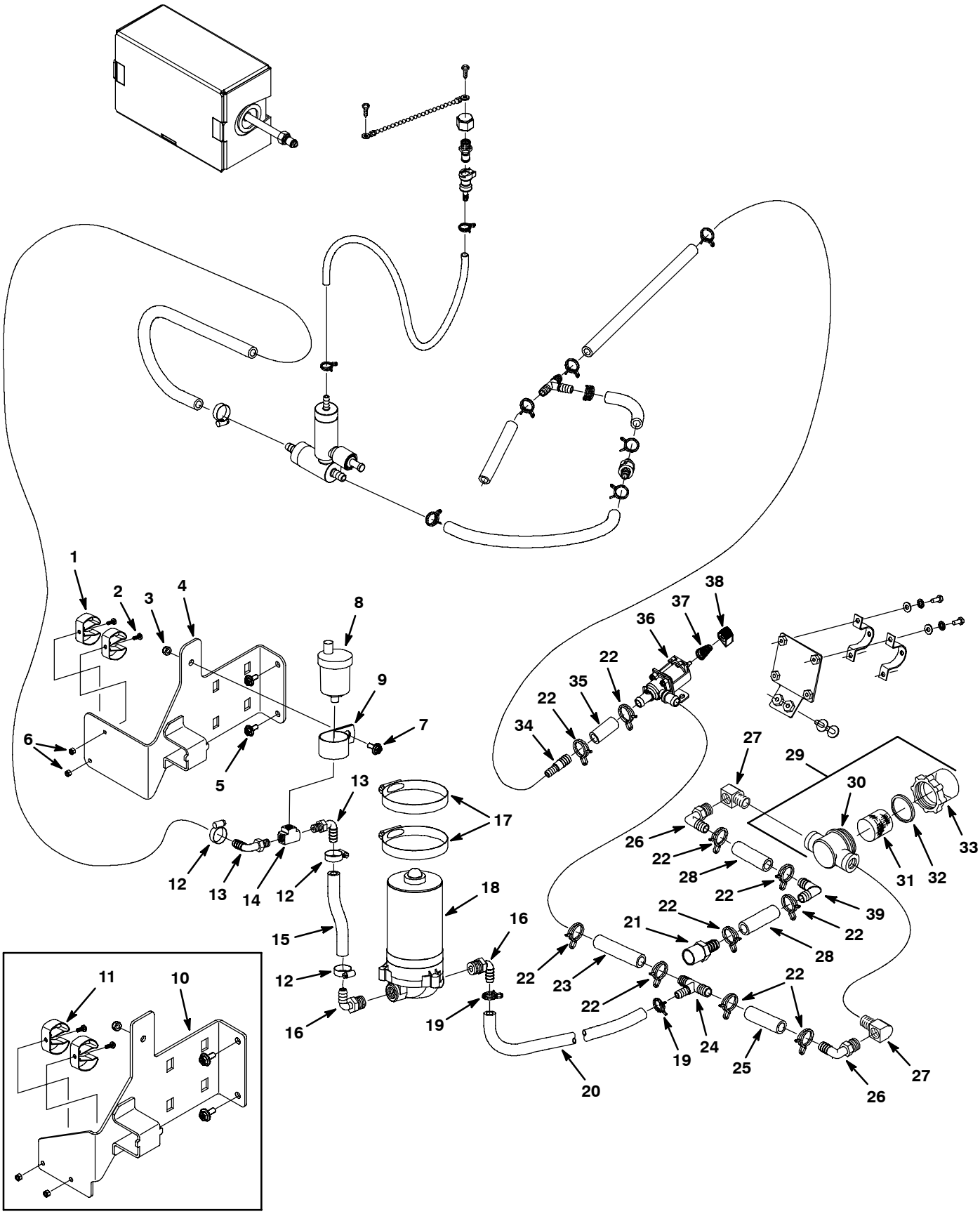

SOLUTION GROUP, FaST MODEL - CONT'D

	Ref.	Part No.	Serial Number		Description	Qty.
	1	573073	(80001391-	)	Clip, Grip, Hose, 1.00-1.38, Zn	2
	2	49697	(80000000-	)	Screw, Pan, M4 X 0.7 X 10, Ss	2
	3	08712	(80000000-	)	Nut, Hex, Lock, M6 X 1.0, Ss, Nl	1
	4	1037242	(80001391-	)	Bracket Wldt, Mtg, Pump [Fast Ii+]	1
	5	1034731	(80000000-	)	Screw, Hex, M6 X 1.00 X 16, Sems, Ss	2
	6	33932	(80000000-	)	Nut, Hex, Lock, M4 X 0.7, Nl, Ss	2
	7	1034731	(80000000-	)●	Screw, Hex, M6 X 1.00 X 16, Sems, Ss	1
	8	1017386	(80000000-	)●	Valve, Air Vent, Float Type	1
	9	53466	(80000000-	)	Clamp, Cable, Stl, 1.50d X 1.00w, 1h	1
	10	1020273	(80000000-80001390	)	Bracket Wldt, Mtg, Pump [Fast]	1
	11	1014295	(80000000-80001390	)	Clip, Grip, Hose, 0.75-1.12, Blk Vyl,Stl	2
	12	54333	(80000000-	)	Clamp, Hose, Wormdrive, 0.31-0.88d, .31w	3
	13	1005564	(80000000-	)	Fitting, Plstc, E90, Bm06/Pm02, Nyl	2
	14	150705	(80000000-	)	Fitting, Brs, Tee, Pf02/Pf02/Pf02	1
	15	613724	(80000000-	)	Hose .38 Id X 10" Pvc Braided	1
	16	1005630	(80000000-	)	Fitting, Plstc, E90, Bm06/Pm06, Nyl	2
	17	43555	(80000000-	)	Clamp, Hose, Wormdrive, 2.50-3.50d, .50w	2
	18	1014282	(80000000-	)●	Pump, Soltn, Ele, 24vdc, 60psi, Packard	1
	19	607775	(80000000-	)	Clamp, Hose, Wir, .63 - .66, Blk	2
	20	613450	(80000000-	)	Hose 3/8idx5/8od Clear 611254 Ft 2.000	1
	21	1023581	(80000000-	)	Fitting, Plstc, Str, Bm08/Pm08, Nyl	1
	22	607776	(80000000-	)●	Clamp, Hose, Wir, .73 - .77, Silver	10
	23	613514	(80000000-	)	Tube, 0.50id X 0.75od Vyl 0.34ft[611259]	1
	24	630372	(80000000-	)	Fitting, Plstc, Tee, Bm06/Bm08/Bm08, Br	1
	25	140957	(80000000-	)	Hose, Vyl, Clr, .50id .75od 2.5l(611259)	1
	26	1017532	(80000000-	)	Fitting, Plstc, E90, Bm08/Pm06	2
	27	150420	(80000000-	)	Fitting, Brs, E90, Pf06/Pm06 [Taped]	2
	28	140957	(80000000-	)	Hose, Pvc, Clr, 0.50id 0.75od 002.5l	2
∇	29	1005302	(80000000-	)●	Filter, In-Line, Pf06/Pf06, 80 Mesh	1
▲	30	613993	(80000000-	)●	Housing, Top, F/1005302	1
▲	31	1005304	(80000000-	)●	Screen, Fltr, 80 Mesh	1
▲	32	613992	(80000000-	)●	Gasket [Viton, F/1005302]	1
▲	33	613991	(80000000-	)●	Bowl, Clr, Short, F/1005302	1
	34	612774	(80000000-	)	Fitting, Plstc, Str, Bm06/Bm08	1
	35	1015071	(80000000-	)	Hose, Afmkt, Pvc, Clr 0.50id 01ft	1
	36	1016595	(80000000-	)●	Valve, 1/4-20 [Liq Dispensing]	1
	37	1017091	(80000000-	)●	Spring, Cmpr, .48d, .036w, .75l	1
	38	1013442	(80000000-	)●	Knob, Valve, Indicator, Blk	1
	39	63987-1	(80000000-	)	Fitting, Plstc, E90, Bm08/Bm08	1
	N/S	130773	(80000000-	)	Tie, Cable, Nyl, 11.0l, .14w, 3.0 Max. D	2

∇ ASSEMBLY

▲ INCLUDED IN ASSEMBLY

● RECOMMENDED STOCK ITEMS

9003906 FAST INJECTOR ASSEMBLY BREAKDOWN (S/N 80001391-)

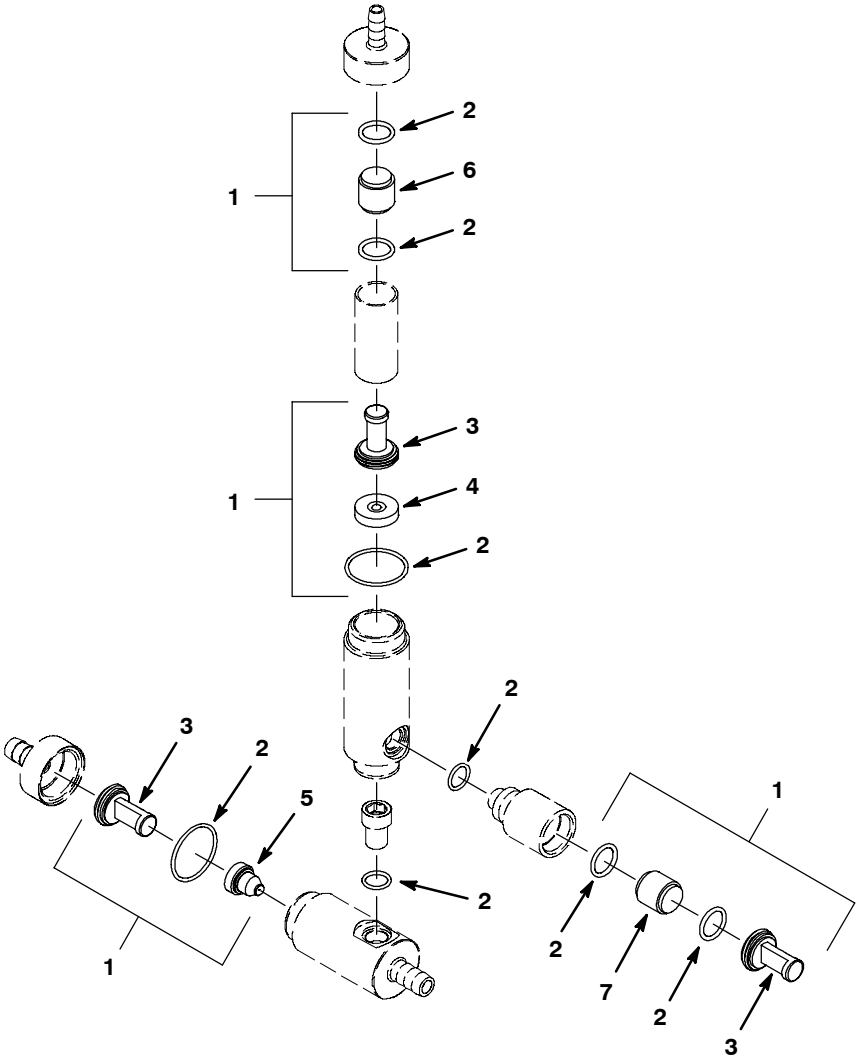

	Ref.	Part No.	Serial Number		Description	Qty.
∇		9003906	(80001391-	)●	Fast Kit, Injector, Ci [T3/Ss3 Fast Ii+]	1
▲	1	9003802	(80001391-	)●	FaST Kit, Ci, Injector Rebuild [FaST II+]	1
▲	2	9003008	(80001391-	)●	FaST Kit, Ci, Injector Seals [FaST II+]	1
▲	3	9003009	(80001391-	)●	FaST Kit, Ci, Injector Filters [FaST II+]	1
▲	4	1039974	(80001391-	)	Plate Assy, Orifice, 0.0065Id, Blk	1
▲	5	1039988	(80001391-	)	Orifice, Plug, .027	1
▲	6	1030444	(80001391-	)	Valve, Check, 0002psi, White, [FaST II+]	1
▲	7	1030441	(80001391-	)	Valve, Check, 0005psi, Brown, [FaST II+]	1

∇ ASSEMBLY

▲ INCLUDED IN ASSEMBLY

● RECOMMENDED STOCK ITEMS

Home Find... Go To..

9003801 FAST INJECTOR ASSEMBLY BREAKDOWN (S/N 80000000-80001390)

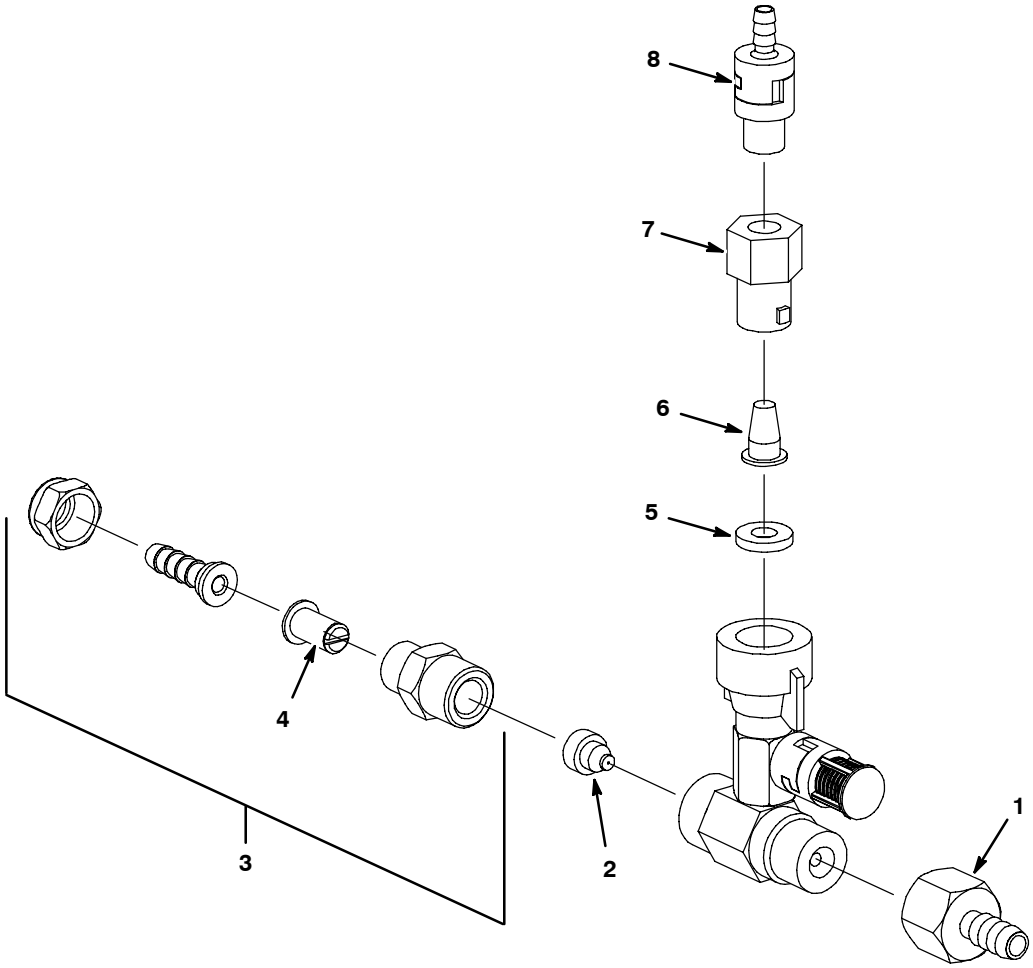

	Ref.	Part No.	Serial Number		Description	Qty.
∇		9003801	(80000000-80001390	)	Fast Kit, Conv, Ci [T3/Ss3 Fast Ii+]	1
▲	1	1014276	(80000000-80001390	)	Fitting, Brs, Str, Bm06/Pf08	1
▲	2	1014470	(80000000-80001390	)●	Plug, Orifice, 0.022	1
▲∇	3	1013411	(80000000-80001390	)●	Filter Assy, 50 Mesh	1
▲▲	4	1006447	(80000000-80001390	)●	Vr, Filter, Screen, 050 Mesh .59D .8L Ss	1
▲	5	1039974	(80000000-80001390	)●	Plate Assy, Orfice, 0.0065Id, Blk	1
▲	6	1029355	(80000000-80001390	)●	Vr, Filter, Screen, 200 Mesh .59D .8L Ss	1
▲	7	1005507	(80000000-80001390	)	Fitting, Plstc, Body, Spray, Pf04	1
▲	8	1014254	(80000000-80001390	)●	Valve, Check, 0002psi Bm04/Pm04	1

∇ ASSEMBLY

▲ INCLUDED IN ASSEMBLY

● RECOMMENDED STOCK ITEMS

SOLUTION GROUP, ec-H2O MODEL

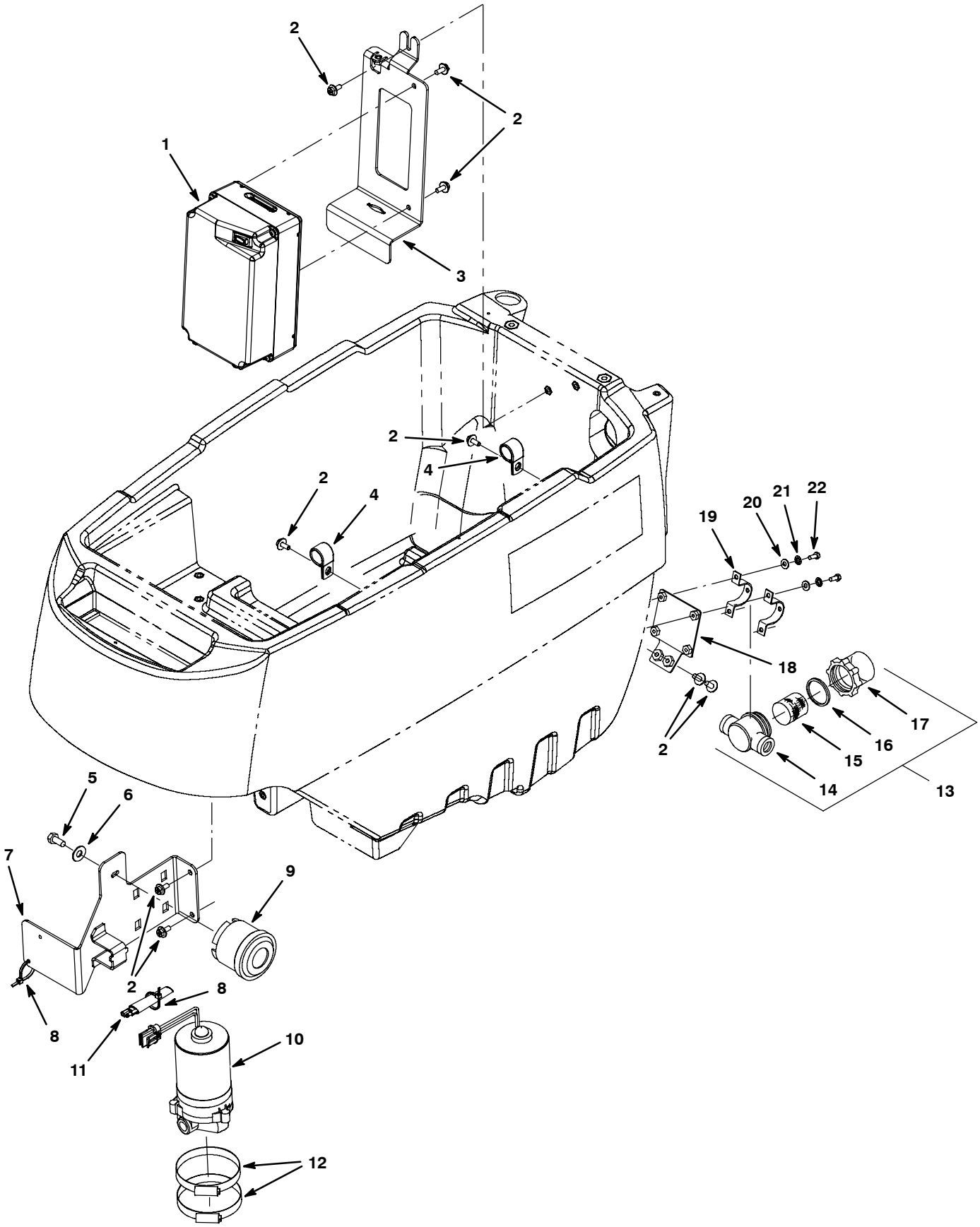

SOLUTION GROUP, ec-H2O MODEL

	Ref.	Part No.	Serial Number		Description	Qty.
	1	9004561	(80002319-	)●	Module Kit, Replmt [Ec-H2o]	1
	2	1034731	(80000000-	)	Screw, Hex, M6 X 1.00 X 16, Ss, Sems	9
	3	1045961	(80002319-	)	Bracket, Mtg, Chrgr [Ss3/T3e Ec-H2o]	1
	4	140314	(80002319-	)	Clamp, Cable, Stl, 0.75d X 0.75w, 1hole	2
	5	11635	(80002319-	)	Screw, Hex, M6 X 1.00 X 12, Nl, Ss	1
	6	01684	(80002319-	)	Washer, Flat, 0.27b 0.69d .05, Ss	1
	7	1037242	(80000000-	)	Bracket Wldt, Mtg, Pump [Fast Ii+]	1
	8	130773	(80000000-	)	Tie, Cable, Nyl, 11.0l, .14w, 3.0 Max. D	2
	9	392937	(80002319-	)●	Horn, 12-48vdc [94 Decibels]	1
∇	10	1042495	(80002319-	)●	Pump, Soltn, Ele, 24vdc, 35psi	1
▲		9004759	(80002319-	)●	Pump Kit, Head, Soltn [Ec-H2o]	1
▲		78950	(80000000-	)●	Connector, Fem, 2cav, Mp280 Sealed	1
▲		78951	(80000000-	)●	Terminal, Fem, Mp280, Sealed, 18-16ga	1
▲		10917	(80000000-	)●	Seal, Wire, 14/16ga [Wp / Mp280 Sealed]	1
▲		78952	(80000000-	)●	Lock, Secondary, 2cav, Mp280 Sealed	1
	11	1040868	(80002319-	)●	Capacitor, Plug [.01 Uf, 200v]	1
	12	43555	(80000000-	)	Clamp, Hose, Wormdrive, 2.50-3.50d, .50w	3
∇	13	1005302	(80000000-	)●	Filter, In-Line, Pf06/Pf06 080mesh 02.6l	1
▲	14	613993	(80000000-	)●	Housing, Top, F/1005302	1
▲	15	1005304	(80000000-	)●	Screen, Fltr, 80 Mesh, Ss	1
▲	16	613992	(80000000-	)●	Gasket [Viton, F/1005302]	1
▲	17	613991	(80000000-	)●	Bowl, Clr, Short, F/1005302	1
	18	1029533	(80000000-	)	Bracket, Mtg, Fltr	1
	19	605056	(80000000-	)	Bracket, Mtg, Fltr	2
	20	01683	(80000000-	)	Washer, Flat, 10, Ss	4
	21	07514	(80000000-	)	Washer, Lock, Int, 10, Ss	4
	22	09738	(80000000-	)	Screw, Hex, M5 X 0.80 X 12, Ss	4

∇ ASSEMBLY

▲ INCLUDED IN ASSEMBLY

● RECOMMENDED STOCK ITEMS

SOLUTION GROUP, ec-H2O MODEL - CONT'D

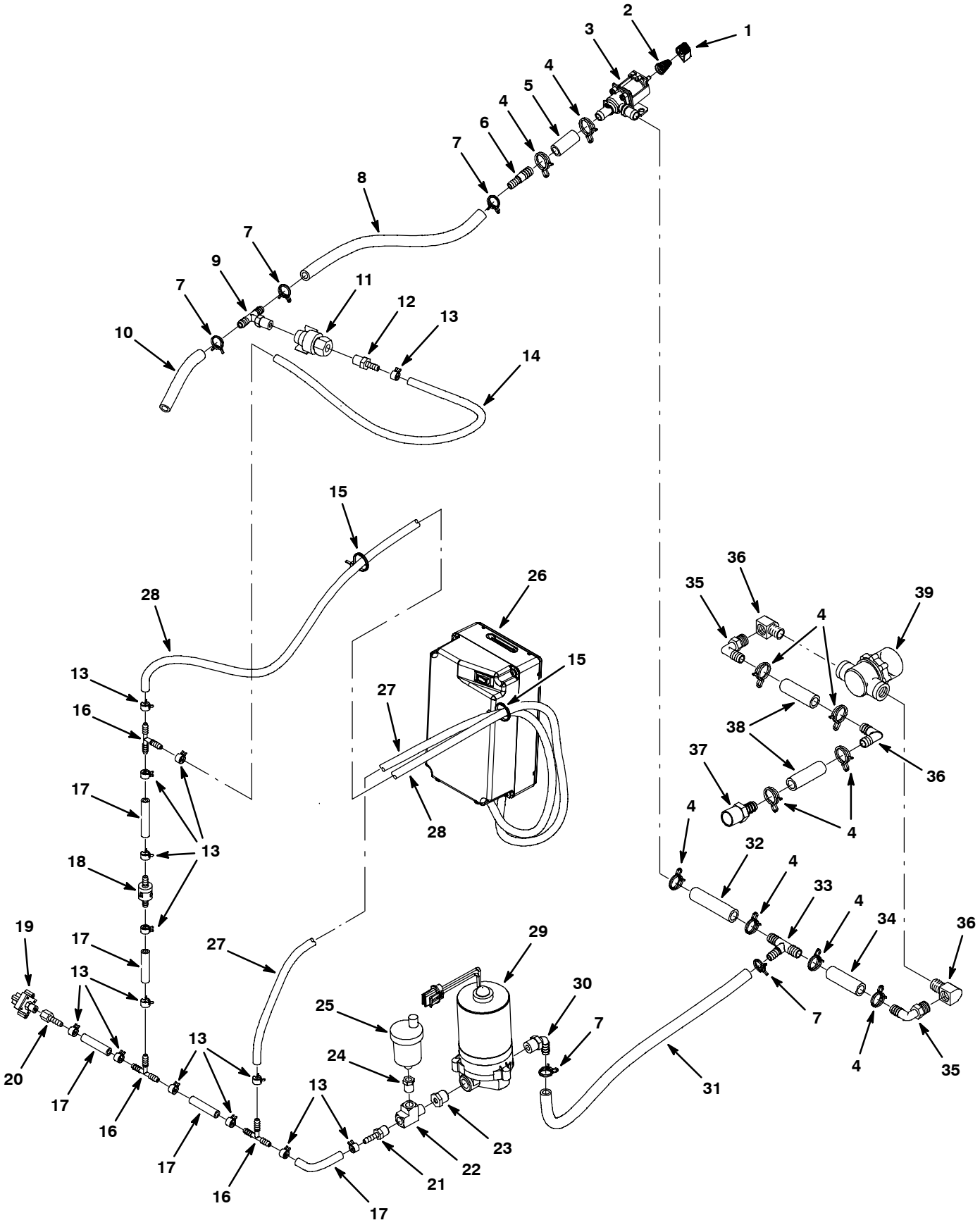

SOLUTION GROUP, ec-H2O MODEL - CONT'D

	Ref.	Part No.	Serial Number		Description	Qty.
	1	1013442	(80000000-	)●	Knob, Valve, Indicator, Blk	1
	2	1017091	(80000000-	)●	Spring, Cmpr, 0.50od .04wir 00.8l	1
	3	1016595	(80000000-	)●	Valve, .25-20 [Liq Dispensing]	1
	4	607776	(80000000-	)	Clamp, Hose, Wir, .73 - .77, Silver	10
	5	1015071	(80000000-	)	Hose, Afmkt, Pvc, Clr, 0.50id, 01ft	1
	6	612774	(80000000-	)	Fitting, Plstc, Str, Bm06/Bm08	1
	7	607775	(80000000-	)	Clamp, Hose, Wir, .63 - .66, Blk	5
	8	613451	(80000000-	)	Hose, Pyu, Clr, 0.38id 0.62od 012.0l	1
	9	1017340	(80002319-	)	Fitting, Plstc, Tee, Bm06/Bm06/Pm04, Br	1
	10	613446	(80000000-	)	Hose, Pyu, Clr, 0.38id 0.62od 010.0l	1
	11	1043866	(80002319-	)	Fitting Assy, Qd, Pf04	1
	12	50901	(80000000-	)	Fitting, Plstc, Str, Bm04/Pm04	1
	13	603654	(80002319-	)	Clamp, Hose, Ear, .44d [Ctb]	14
	14	578820000	(80002319-	)	Hose, Pvc, Brd, 0.25id 0.44od 157.2l,Clr	1
	15	130773	(80002319-	)	Tie, Cable, Nyl, 11.0l, .14w, 3.0 Max. D	2
	16	150713	(80002319-	)	Fitting, Plstc, Tee, Bm04/Bm04/Bm04	3
	17	578820000	(80002319-	)	Hose, Pvc, Brd, 0.25id 0.44od 157.2l,Clr	1
	18	1044334	(80002319-	)●	Valve, Check, 0017psi Bm04/Bm04	1
	19	1044335	(80002319-	)●	Switch, Press, 6psi, Pm02	1
	20	150520	(80002319-	)	Fitting, Brs, Str, Bm04/Pf02	1
	21	150515	(80002319-	)	Fitting, Brs, Str, Bm04/Pm04 [Taped]	1
	22	150709	(80002319-	)	Fitting, Brs, Tee, Pm04/Pf04/Pf04, Run	1
	23	1016383	(80002319-	)	Fitting, Brs, Str, Pf04/Pm06	1
	24	150100	(80002319-	)	Fitting, Brs, Str, Pf02/Pm04	1
	25	1017386	(80000000-	)●	Valve, Vent, Air, Float Type	1
∇	26	9004561	(80002319-	)●	Module Kit, Replmt [Ec-H2o]	1
▲	27	578820000	(80002319-	)	Hose, Pvc, Brd, 0.25id 0.44od 157.2l,Clr	1
▲	28	9004606	(80002319-	)	Hose, Pvc, Brd, .25id .45od 64l, Clr	1
	29	1042495	(80002319-	)●	Pump, Soltn, Ele, 24vdc, 35psi	1
	30	1005630	(80000000-	)	Fitting, Plstc, E90, Bm06/Pm06, Nyl	1
	31	613521	(80002319-	)	Hose, Pvc, Clr, 0.50id 0.75od 012.0l	1
	32	613514	(80000000-	)	Hose, Pvc, Clr, 0.50id 0.75od 004.1l	1
	33	630372	(80000000-	)	Fitting, Plstc, Tee, Bm06/Bm08/Bm08, Br	1
	34	140957	(80000000-	)	Hose, Pvc, Clr, 0.50id 0.75od 002.5l	1
	35	1017532	(80000000-	)	Fitting, Plstc, E90, Bm08/Pm06	2
	36	150420	(80000000-	)	Fitting, Brs, E90, Pf06/Pm06 [Taped]	2
	37	1023581	(80000000-	)	Fitting, Plstc, Str, Bm08/Pm08, Nyl	1
	38	140957	(80000000-	)	Hose, Pvc, Clr, 0.50id 0.75od 002.5l	2
	39	63987-1	(80000000-	)	Fitting, Plstc, E90, Bm08/Bm08	1
	40	1005302	(80000000-	)●	Filter, In-Line, Pf06/Pf06 080mesh 02.6l	1

∇ ASSEMBLY

▲ INCLUDED IN ASSEMBLY

● RECOMMENDED STOCK ITEMS

9004561 ec-H2O MODULE ASSEMBLY BREAKDOWN

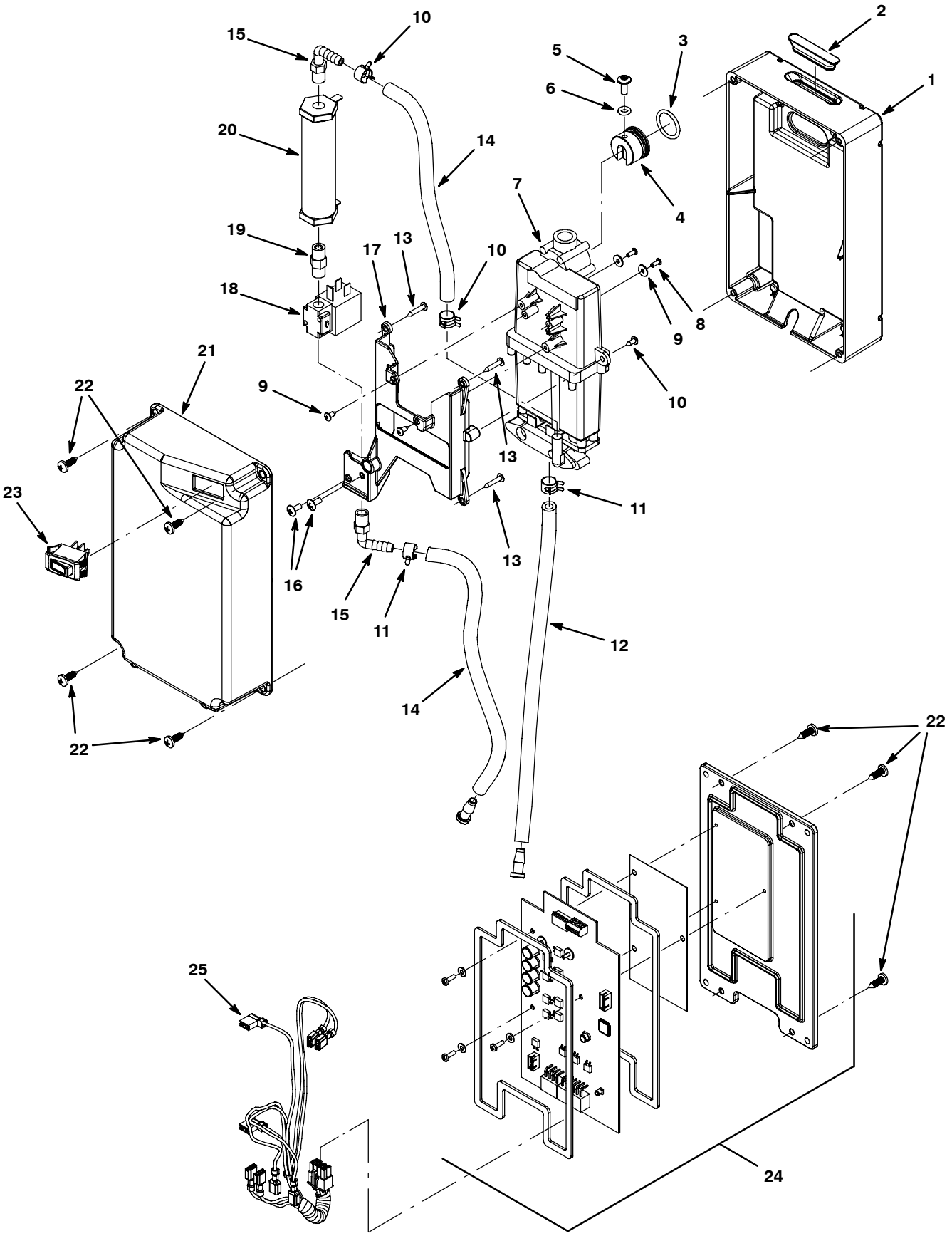

9004561 ec-H2O MODULE ASSEMBLY BREAKDOWN

	Ref.	Part No.	Serial Number		Description	Qty.
∇		9004561	(80002319-	)●	Module Kit, Replmt [Ec-H2o]	1
▲	1	1037032	(80002319-	)	Housing, Bottom	1
▲	2	1050431	(80002319-	)●	Grommet, Blind	1
▲	3	1038220	(80002319-	)●	Seal, Org, .799 X .103, Viton	1
▲	4	1038276	(80002319-	)	Plug, Cell	1
▲	5	609062	(80002319-	)	Screw, Trs, Phl, 08-32 X 0.38, Ss	1
▲	6	1038277	(80002319-	)●	Seal, Org, .206 X .103, Viton	1
▲	7	1033963	(80002319-	)●	Electrode, 5 Plate	1
▲	8	578860	(80002319-	)	Screw, Pan, Phl, 04-40 X 0.31, Pl	2
▲	9	02892	(80002319-	)	Washer, Flat, 0.12b 0.38d .03, Stl, Pl	2
▲	10	3701.6	(80002319-	)	Screw, Pan, Phl, 06-32 X 0.38, Shtmtl,Ss	4
▲	11	603654	(80002319-	)	Clamp, Hose, Ear, .44d [Ctb]	4
▲	12	9004606	(80002319-	)	Hose, Pvc, Brd, .25id .45od 46l, Clr	1
▲	13	140826	(80002319-	)	Screw, Pan, 06-32 X 0.75, Fmg/Ab, Ss	4
▲	14	578820000	(80002319-	)	Hose, Pvc, Brd, 0.25id 0.44od 157.2l,Clr	1
▲	15	1037595	(80002319-	)	Fitting, Plstc, E90, Bm04/Pm02, Nyl	2
▲	16	140801	(80002319-	)	Screw, Trs, Phl, 08-32 X 0.38, Ss	2
▲	17	1038618	(80002319-	)	Adapter, Cell	1
▲	18	1013236	(80002319-	)●	Valve, Shutoff, Ele, 24vdc	1
▲	19	1045030	(80002319-	)	Fitting, Brs, Str, Pm02/Pm02	1
▲	20	1038159	(80002319-	)●	Electrode, Cylindrical	1
▲	21	1037034	(80002319-	)	Housing, Upper	1
▲	22	1018155	(80002319-	)	Screw, Pan, Phl, M5 X 0.80 X 16, Tcut,Ss	8
▲	23	1044393	(80002319-	)●	Switch, Rocker, Spst, Mom,	1
▲	24	9004220	(80002319-	)●	Controller Kit, Replmt [Ec-H2o]	1
	25	1044399	(80002319-	)●	Harness, Main, Controller [Ec-H2o, P3]	1

∇ ASSEMBLY

▲ INCLUDED IN ASSEMBLY

● RECOMMENDED STOCK ITEMS

SOLUTION GROUP, STANDARD MODEL

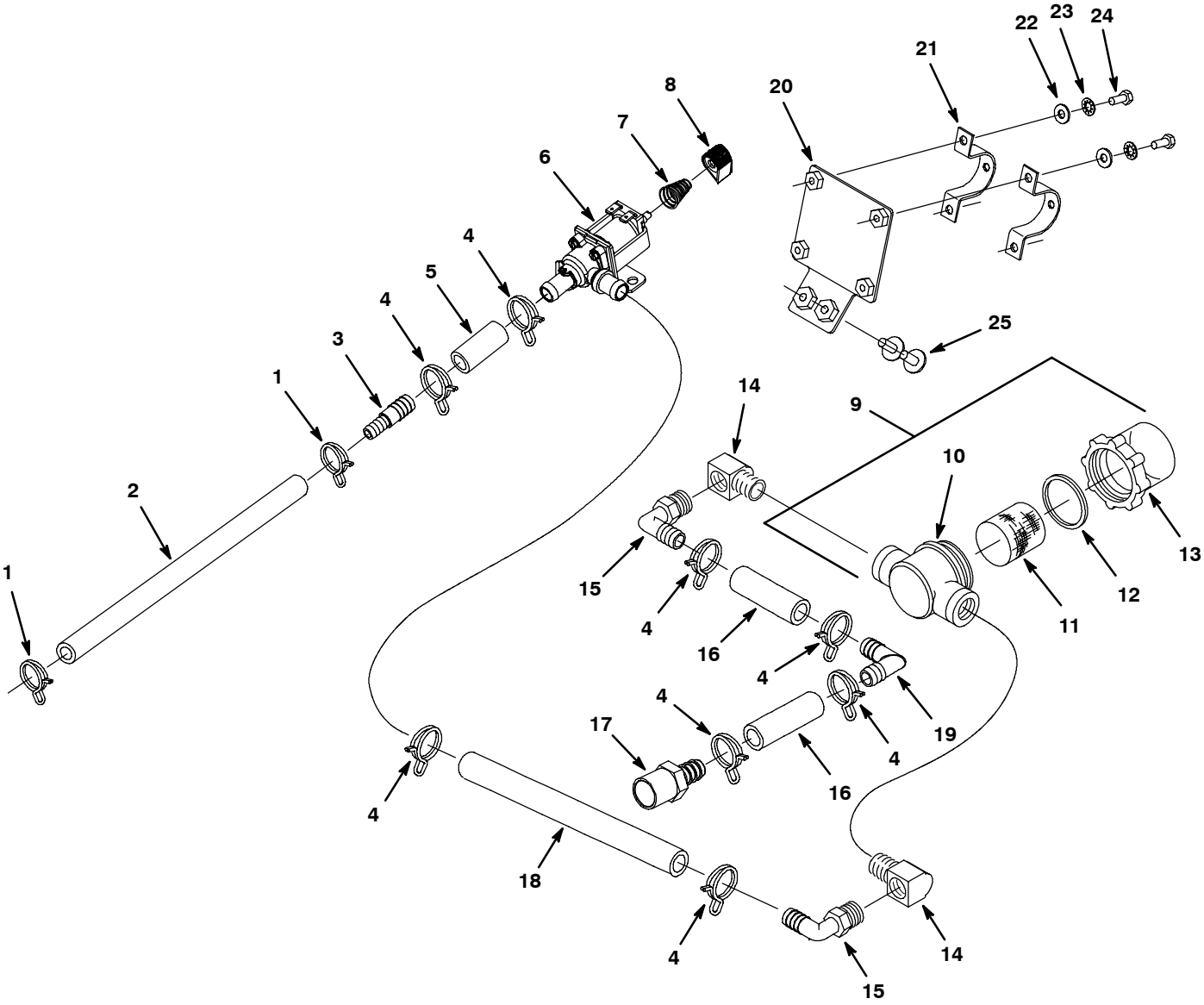

SOLUTION GROUP, STANDARD MODEL

	Ref.	Part No.	Serial Number		Description	Qty.
	1	607775	(80000000–	)	Clamp, Hose, Wir, .63 – .66, Blk	2
	2	613444	(80000000–	)	Hose 3/8idx5/8od Clear 611254 Ft 1.670	1
	3	612774	(80000000–	)	Fitting, Plstc, Str, Bm06/Bm08	1
	4	607776	(80000000–	)	Clamp, Hose, Wir, .73 – .77, Silver	8
	5	606225	(80000000–	)	Hose 1/2id X 1.79”	1
	6	1016595	(80000000–	)●	Valve, 1/4–20 [Liq Dispensing]	1
	7	1017091	(80000000–	)	Spring, Cmpr, .48d, .036w, .75l	1
	8	1013442	(80000000–	)●	Knob, Valve, Indicator, Blk	1
∇	9	1005302	(80000000–	)●	Filter, In–Line, Pf06/Pf06, 80 Mesh	1
▲	10	613993	(80000000–	)●	Housing, Top, F/1005302	1
▲	11	1005304	(80000000–	)●	Screen, Fltr, 80 Mesh	1
▲	12	613992	(80000000–	)●	Gasket [Viton, F/1005302]	1
▲	13	613991	(80000000–	)●	Bowl, Clr, Short, F/1005302	1
	14	150420	(80000000–	)	Fitting, Brs, E90, Pf06/Pm06 [Taped]	2
	15	1017532	(80000000–	)	Fitting, Plstc, E90, Bm08/Pm06	2
	16	140957	(80000000–	)	Hose, Pvc, Clr, 0.50id 0.75od 002.5l	2
	17	1023581	(80000000–	)	Fitting, Plstc, Str, Bm08/Pm08, Nyl	1
	18	613517	(80000000–	)	Tube, 0.50id X 0.75od Vyl 0.46ft[611259]	1
	19	63987–1	(80000000–	)	Fitting, Plstc, E90, Bm08/Bm08	1
	20	1029533	(80000000–	)	Bracket, Mtg, Fltr	1
	21	605056	(80000000–	)	Bracket, Mtg, Fltr	2
	22	01683	(80000000–	)	Washer, Flat, #10, Ss	4
	23	07514	(80000000–	)	Washer, Lock, Int, #10, Ss	4
	24	09738	(80000000–	)	Screw, Hex, M5 X 0.8 X 12, Ss	4
	25	1034731	(80000000–	)	Screw, Hex, M6 X 1.00 X 16, Ss, Sems	2

∇ ASSEMBLY

▲ INCLUDED IN ASSEMBLY

● RECOMMENDED STOCK ITEMS

SQUEEGEE GROUP, 500 mm

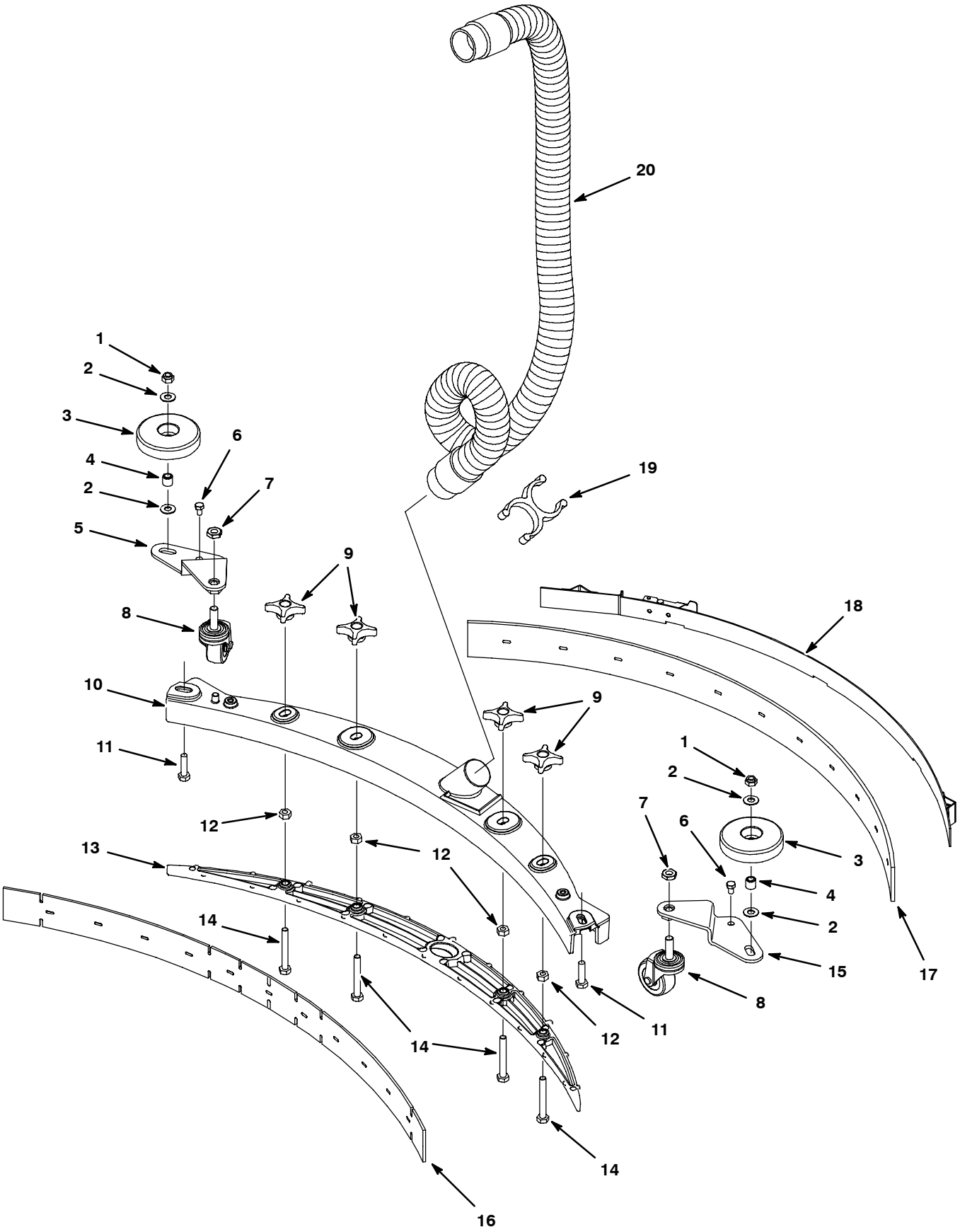

SQUEEGEE GROUP, 500 mm

	Ref.	Part No.	Serial Number		Description	Qty.
∇		9001178	(80000000–	)●	Squeegee Assy Kit, 500mm, Ci	1
▲	1	08713	(80000000–	)	Nut, Hex, Lock, M8 X 1.25, Nl, Ss	2
▲	2	140027	(80000000–	)	Washer, Flat, 0.35b 0.75d .04, Ss	4
▲	3	1010560	(80000000–	)●	Wheel, Bmpr, 80d X 25w, Non–Marking	2
▲	4	222460	(80000000–	)	Sleeve, P/M, 0.31b 0.50d 0.5l	2
▲	5	1011228	(80000000–	)	Plate, Mtg, Caster, Sqge, Rh	1
▲	6	74455	(80000000–	)	Screw, Hex, M6 X 1.0 X 12, Fmg	2
▲	7	32716	(80000000–	)	Nut, Hex, Jam, M10 X 1.5, Ss	2
▲	8	1006343	(80000000–	)●	Caster, Swivel, 50mmd, M10 X 30 Stem, Pl	2
▲	9	1010558	(80000000–	)●	Knob, Star, 2.00d 4ear .73l M8x1.25 Thru	4
▲	10	1011163	(80000000–	)	Frame, Sqge, 74cm [50cm] Die Cast	1
▲	11	09011	(80000000–	)	Screw, Hex, M8 X 1.25 X 30, Ss	2
▲	12	07786	(80000000–	)	Nut, Hex, Std, M8 X 1.25, Ss	4
▲	13	1019919	(80000000–	)	Retainer, Sqge, 76cm [50cm] Nyl, Blk	1
▲	14	1014163	(80000000–	)	Screw, Hex, M8 X 1.25 X 60, Fl, Ss	4
▲	15	1011956	(80000000–	)	Plate, Mtg, Caster, Sqge, Lh	1
▲	16	1011232	(80000000–	)●	Blade, Sqge, Front, 500mml Linatex (Standard)	1
	16	1014091	(80000000–	)●	Blade, Sqge, Front, 500mml, Gum (Optional)	1
	16	1014092	(80000000–	)●	Blade, Sqge, Front, 500mml, Oil–Rstn (Optional)	1
▲	17	1011456	(80000000–	)●	Blade, Sqge, Rear, 32.7l, Linatex[500mm] (Standard)	1
	17	1014093	(80000000–	)●	Blade, Sqge, Rear, 32.7l, Gum [500mm] (Optional)	1
	17	1014094	(80000000–	)●	Blade, Sqge, Rear, 32.7l,Oil–Rstn[500mm] (Optional)	1
▲	18	1013933	(80000000–	)	Strap Assy, Sqge, 500mm	1
	19	1014079	(80000000–	)●	Clip, Hose, Gripper, 1.50id, Dbl, Blk Pp	1
	20	1014026	(80000000–	)●	Hose, Vacuum, 1.5d X 57l, 2–Short Cuffs	1

∇ ASSEMBLY

▲ INCLUDED IN ASSEMBLY

● RECOMMENDED STOCK ITEMS

BATTERY AND CABLE GROUP, 12V/105 AH, 43 cm (17 in) BRUSH ASSIST MODEL

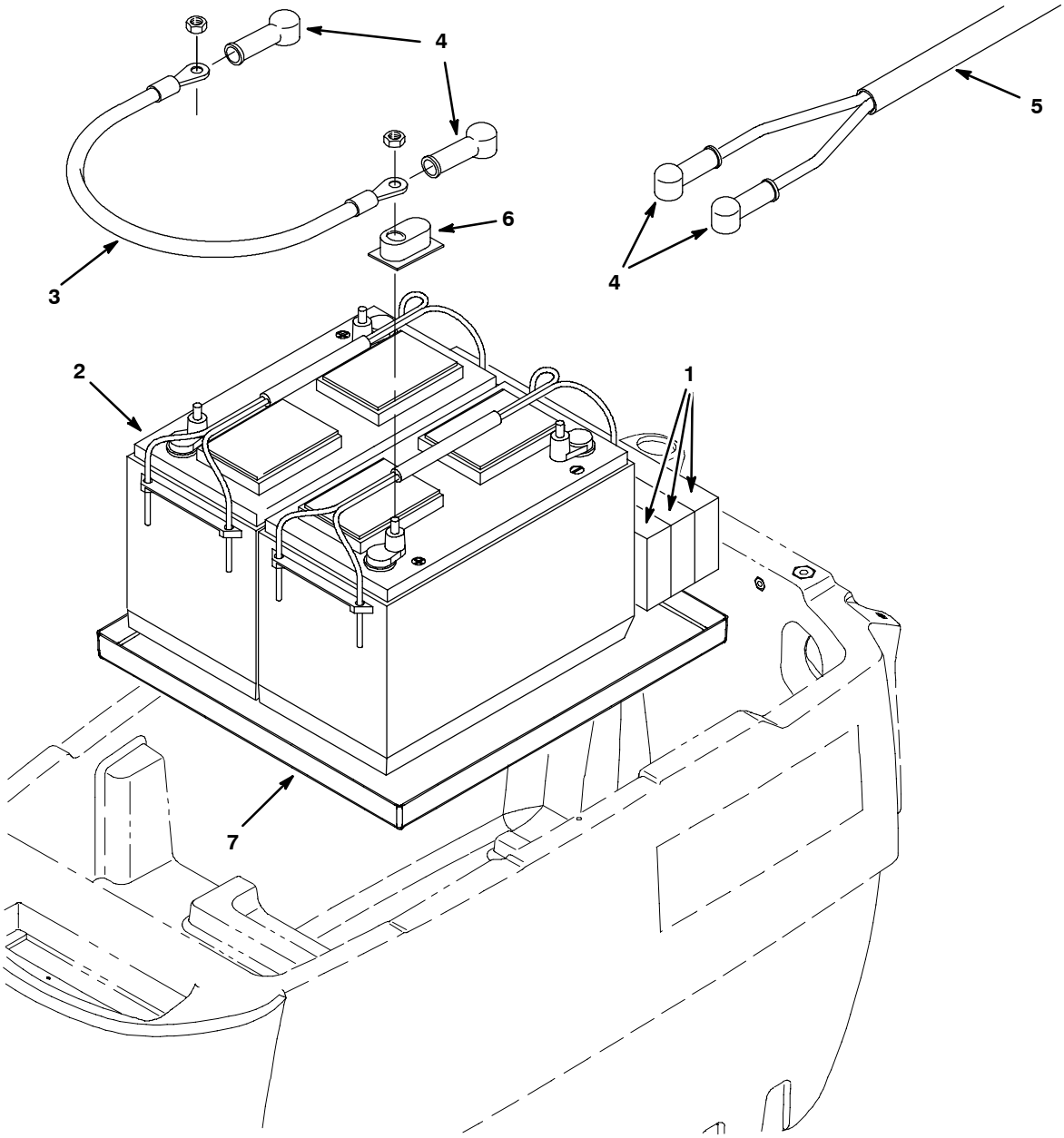

Ref.	Part No.	Serial Number	Description	Qty.
1	630375	(80000000–)	● Spacer, Battery, 1.25 X 3.25 X 13.7 Foam	3
2	578426	(80000000–)	● Battery, 12vdc, 0530cca, 105ah [27tmx]	2
3	130364	(80000000–)	● Cable, 06ga 15.0l Blk .31ring /.38ring	1
4	611221	(80000000–)	● Boot, Terminal, Battery, 25.4mm, Blk	4
5	1015941	(80000000–)	Harness, Battery	1
6	45962	(80000000–)	● Cap, Plstc, .04 1.38 X 2.30 0.5l	4
7	1012994	(80000000–)	● Tray, Battery	1

● RECOMMENDED STOCK ITEMS

BATTERY AND CABLE GROUP, 12V/130 Ah, 50 cm (20 in) BRUSH ASSIST MODEL

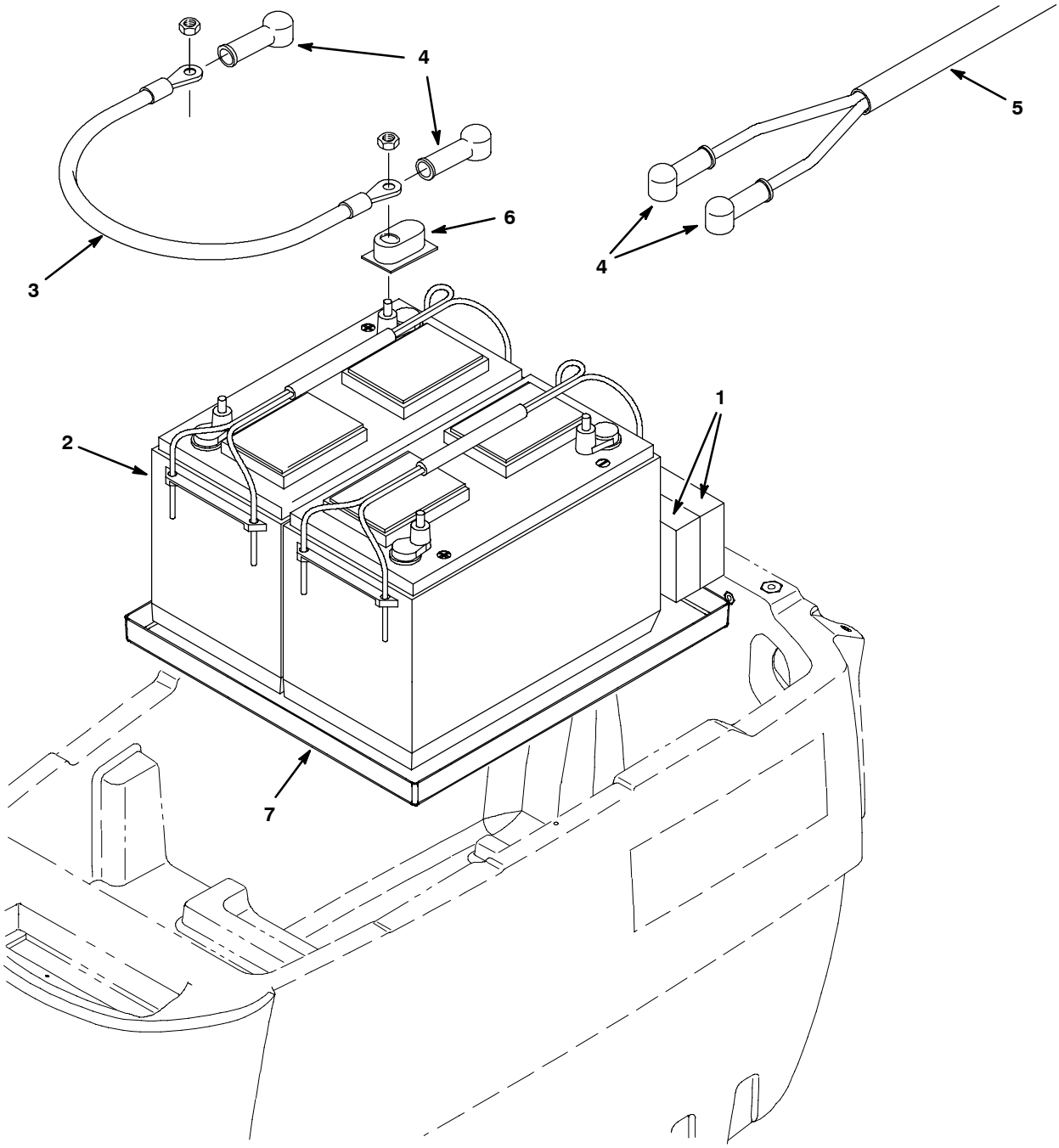

Ref.	Part No.	Serial Number	Description	Qty.
1	630375	(80000000-)●	Spacer, Battery, 1.25 X 3.25 X 13.7 Foam	2
2	130869	(80000000-)●	Battery, 12vdc, Cca, 130ah(30xhs-Wnt)	2
3	130364	(80000000-)●	Cable, 06ga 15.0l Blk .31ring /.38ring	1
4	611221	(80000000-)●	Boot, Terminal, Battery, 25.4mm, Blk	4
5	1015941	(80000000-)	Harness, Battery	1
6	45962	(80000000-)●	Cap, Plstc, .04 1.38 X 2.30 0.5l	4
7	1012994	(80000000-)●	Tray, Battery	1

● RECOMMENDED STOCK ITEMS

BATTERY AND CABLE GROUP, 12V/155 AH, 50 cm (20 in) DRIVE MODEL

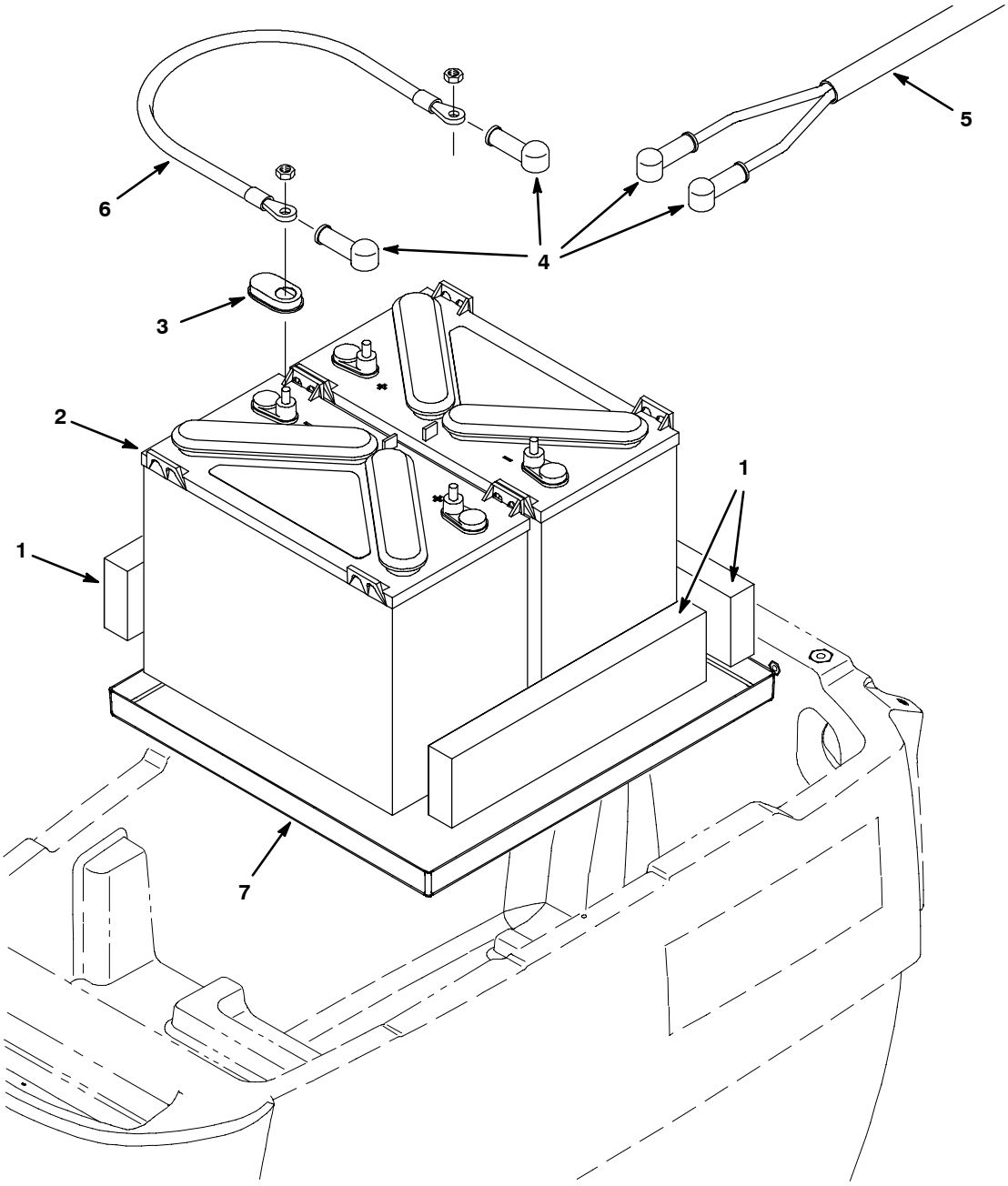

	Ref.	Part No.	Serial Number		Description	Qty.
	1	630375	(80000000–	)●	Spacer, Battery, 1.25 X 3.25 X 13.7 Foam	3
∇	2	1015046	(80000000–	)●	Battery, 12vdc, 155ah, Wet	2
▲	3	1041030	(80000000–	)●	Cap, Battery	4
	4	611221	(80000000–	)●	Boot, Terminal, Battery, 25.4mm, Blk	4
	5	1015941	(80000000–	)	Harness, Battery	1
	6	130364	(80000000–	)●	Cable, 06ga 15.0l Blk .31ring /.38ring	1
	7	1012994	(80000000–	)●	Tray, Battery	1

∇ ASSEMBLY

▲ INCLUDED IN ASSEMBLY

● RECOMMENDED STOCK ITEMS

ELECTRICAL DIAGRAM, BRUSH ASSIST STANDARD & FaST MODEL

1032409

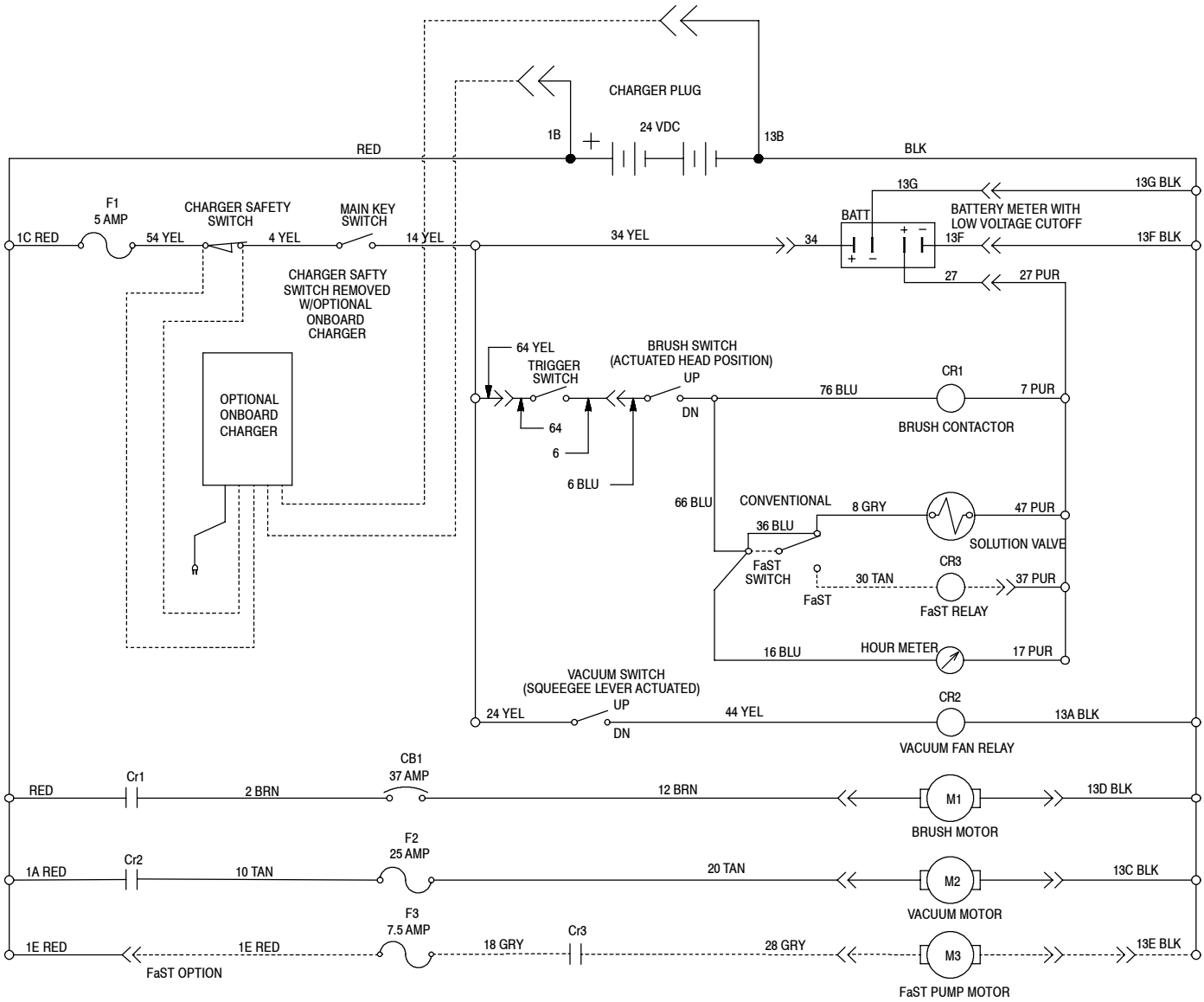

ELECTRICAL DIAGRAM, DRIVE STANDARD & FaST MODEL

1032396

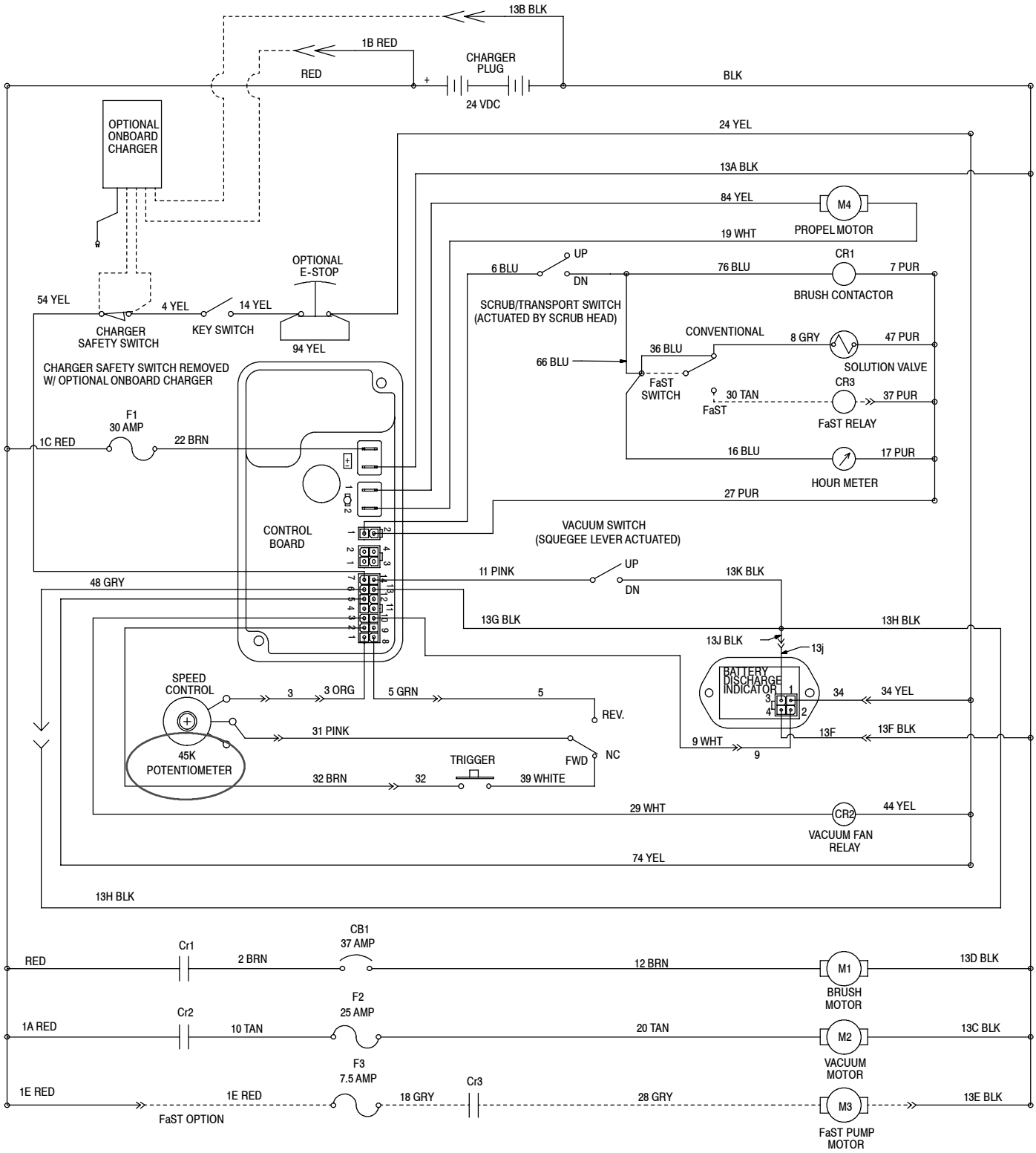

ELECTRICAL DIAGRAM, BRUSH ASSIST ec-H2O MODEL

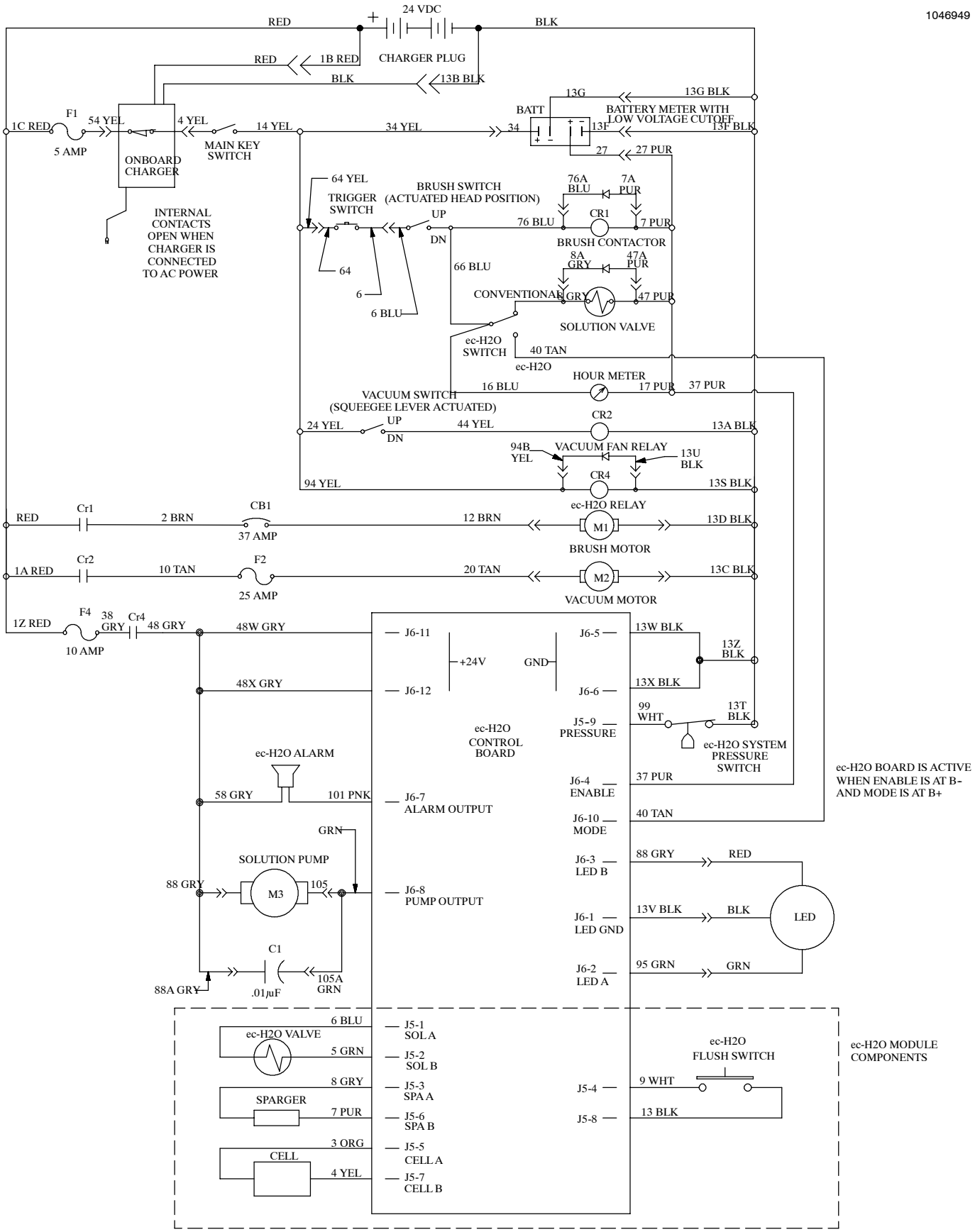

ELECTRICAL DIAGRAM, DRIVE ec-H2O MODEL

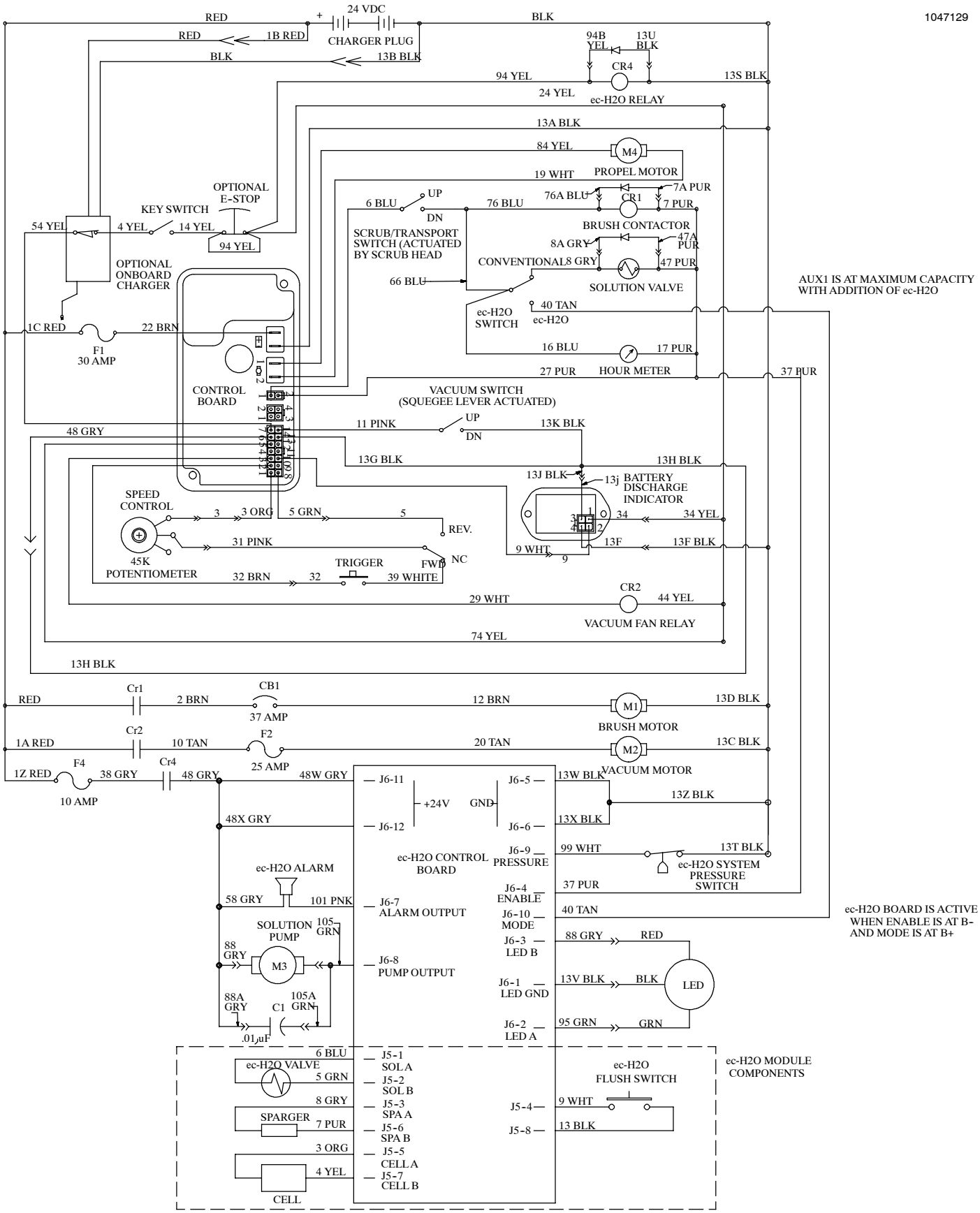

OFF-BOARD BATTERY CHARGER GROUP

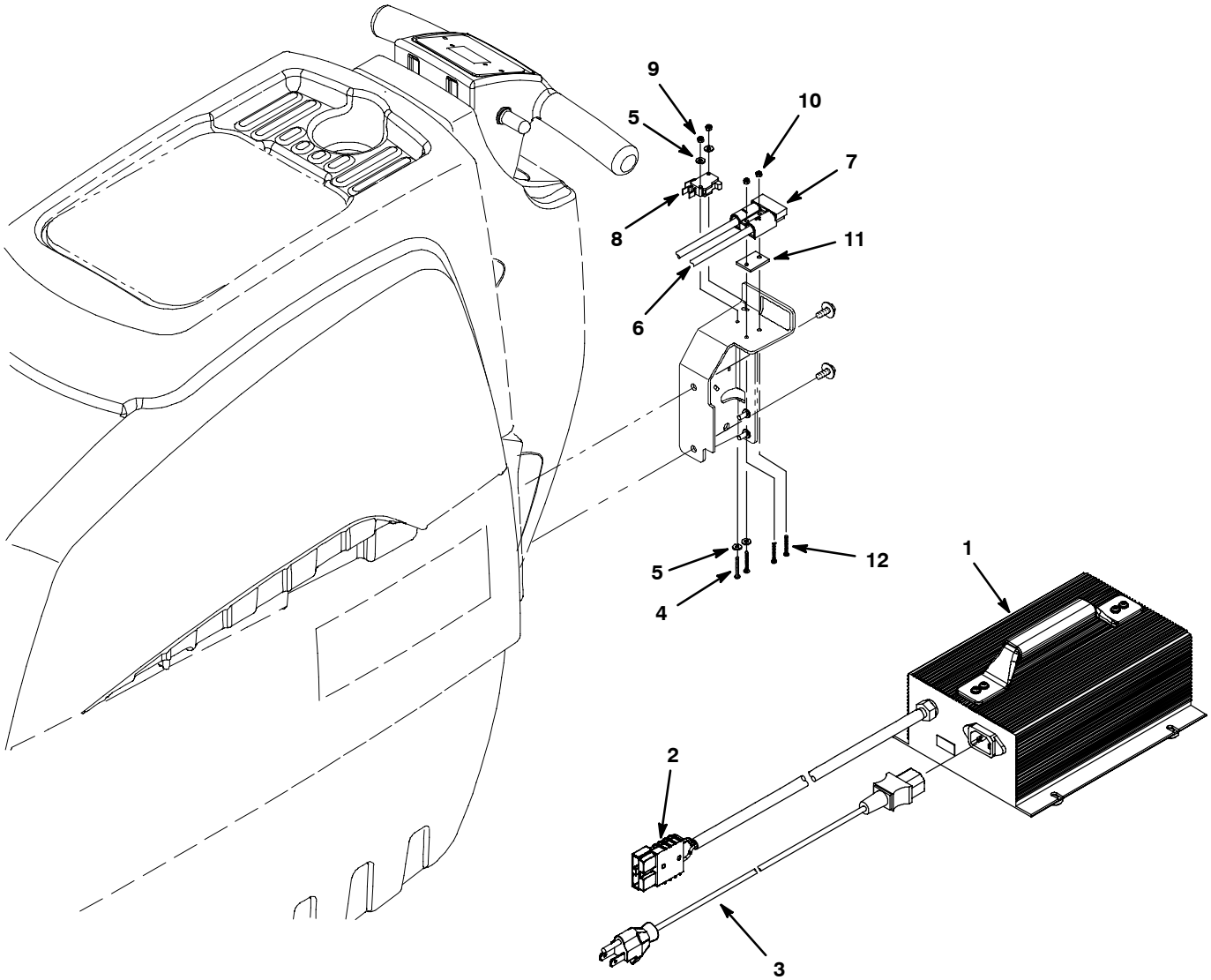

	Ref.	Part No.	Serial Number		Description	Qty.
∇		9003347	(80000000–	)●	Kit, Charger, Off–Board, 120vac, 24vdc	1
▲∇	1	1029216	(80000000–	)●	Charger, 24vdc, 11a Var Vac 1ph 50/60hz	1
▲▲	2	605387	(80000000–	)●	Connector, Anderson, 50a,Red W/O Contact	1
▲	3	1025642	(80000000–	)●	Cord, Power, 16/3, 4.5 Meters, Blk [Us/Japan]	1
▲	4	06922	(80000000–	)	Screw, Pan, M3 X 0.50 X 20, 4.8	2
▲	5	41578	(80000000–	)	Washer, Flat, #06, Ss	4
▲∇	6	1033362	(80000000–	)	Harness, Chrgr [T3e – Ss3]	1
▲▲	7	605387	(80000000–	)●	Connector, Anderson, 50a,Red W/O Contact	1
▲	8	611005	(80000000–	)●	Switch, Rlr, 16a, Micro	1
▲	9	579211	(80000000–	)	Nut, Hex, Lock, M3 X 0.50, Ss	2
▲	10	33932	(80000000–	)	Nut, Hex, Lock, M4 X 0.70, Nl, Ss	2
▲	11	603331	(80000000–	)	Spacer, Plug, Chrgr	1
▲	12	1033197	(80000000–	)	Screw, Pan, M4x0.7x24, Phl, Ss [7985]	2

∇ ASSEMBLY

▲ INCLUDED IN ASSEMBLY

● RECOMMENDED STOCK ITEMS

ON-BOARD BATTERY CHARGER GROUP, STANDARD & FaST MODEL

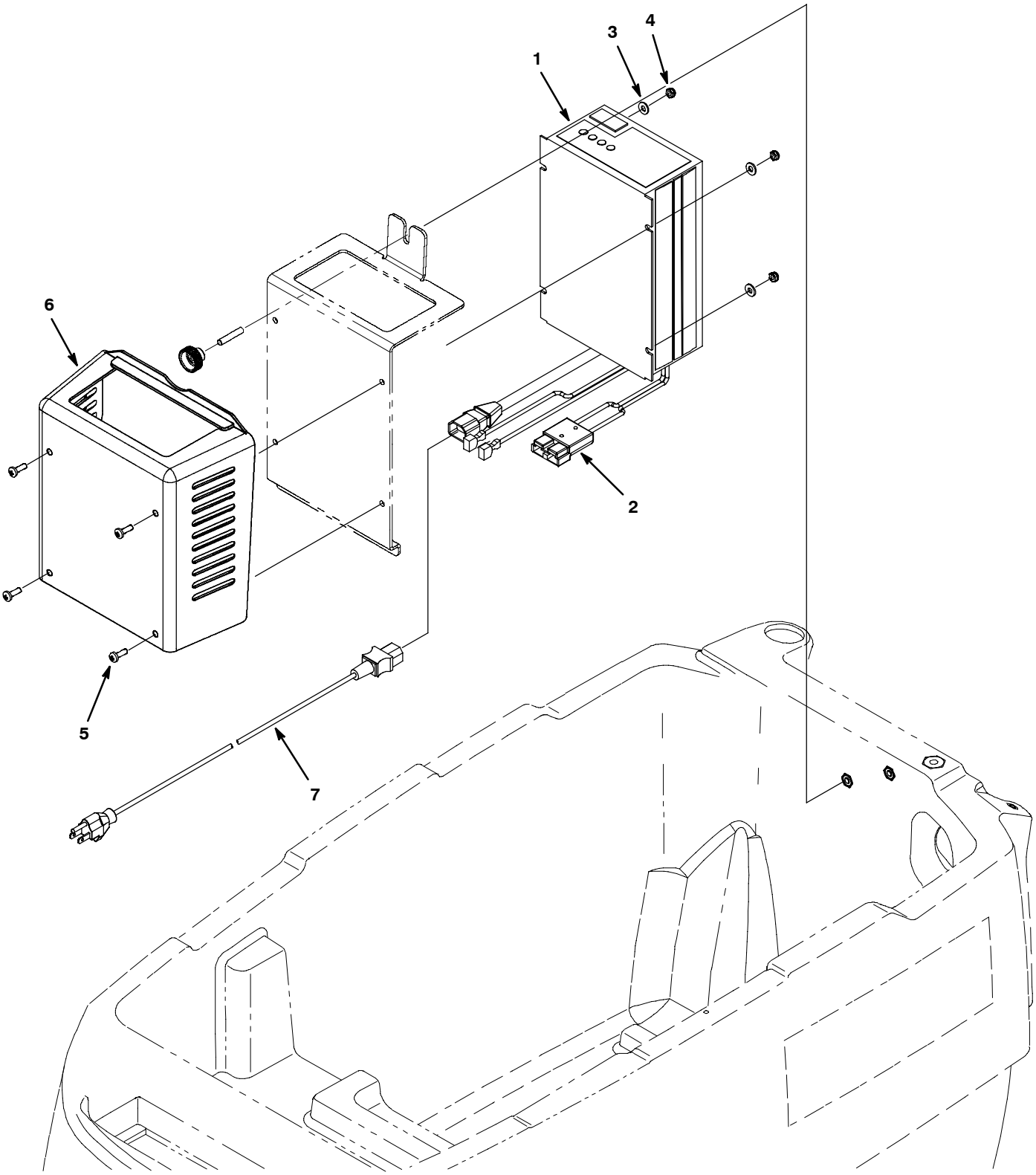

ON-BOARD BATTERY CHARGER GROUP, STANDARD & FaST MODEL

	Ref.	Part No.	Serial Number		Description	Qty.
∇		9003065	(80000000–	)●	Charger Kit [On–Board, T3e/Ss3]	1
▲∇	1	1028508	(80000000–	)●	Charger, 24vdc 11a 100/240vac 50/60hz	1
▲▲	2	605387	(80000000–	)●	Connector, Anderson, 50a,Red W/O Contact	1
▲	3	01683	(80000000–	)	Washer, Flat, 0.22b 0.50d .05, Ss [#10]	4
▲	4	09739	(80000000–	)	Nut, Hex, Lock, M5 X 0.80, Nl, Ss	4
▲	5	06934	(80000000–	)	Screw, Pan, Phl, M5 X 0.80 X 20, 4.8	4
▲	6	1040600	(80000000–	)	Cover, Charger [Ss3]	1
▲	N/S	1045989	(80000000–	)	Harness, Chrgr [Onboard, T3e/Ss3 Ec–H2o]	1
	7	1025642	(80000000–	)●	Cord, Power, 16/3, 4.5 Meters, Blk [Us] (Us/Japan)	1
	7	1026330	(80000000–	)●	Cord, Power,1.0mm2 X 2.5 Meters [China]	1
	7	1026325	(80000000–	)●	Cord, Power, 1.0mm2 X 2.5 Meters [Aus]	1
	7	1032849	(80000000–	)●	Cord, Power, 4.5 Meter, Blk [Ce]	1

∇ ASSEMBLY

▲ INCLUDED IN ASSEMBLY

● RECOMMENDED STOCK ITEMS

ON-BOARD BATTERY CHARGER GROUP, ec-H2O MODEL

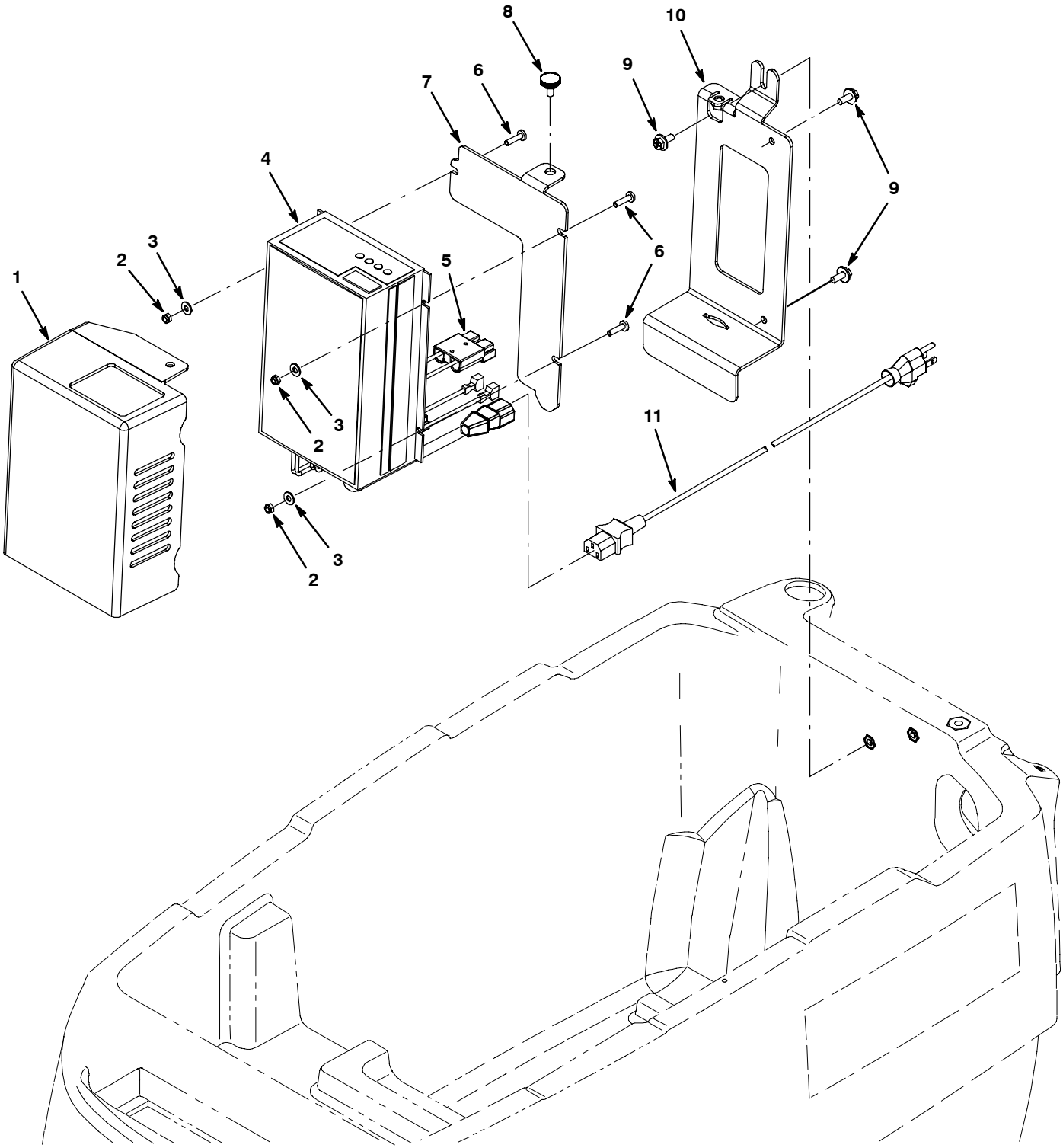

ON-BOARD BATTERY CHARGER GROUP, ec-H2O MODEL

	Ref.	Part No.	Serial Number		Description	Qty.
∇		9004546	(80002319-	)●	Charger Kit [On-Board, T3e/Ss3 Ec-H2o]	1
▲	1	1045985	(80002319-	)	Cover, Chrgr [T2 Ec-H2o Concept]	1
▲	2	09739	(80002319-	)	Nut, Hex, Lock, M5 X 0.80, Nl, Ss	3
▲	3	01683	(80002319-	)	Washer, Flat, 10, Ss	3
▲∇	4	1028508	(80000000-	)●	Charger, 24vdc 11a 100/240vac 50/60hz	1
▲▲	5	605387	(80000000-	)●	Connector, Anderson, 50a,Red W/O Contact	1
▲	6	06934	(80002319-	)	Screw, Pan, Phl, M5 X 0.80 X 20, 4.8	3
▲	N/S	1045989	(80002319-	)●	Harness, Chrgr [Onboard, T3e/Ss3 Ec-H2o]	1
	7	1045966	(80002319-	)	Brkt, Mntg, Chrgr [Ss3] W/Echo	1
	8	1046631	(80002319-	)●	Knob,Rnd,19mmod,M6x20,Stud,Plstc,Pl	1
	9	1034731	(80002319-	)	Screw, Hex, M6 X 1.00 X 16, Ss, Sems	3
	10	1045961	(80002319-	)	Brkt, Mntg, Echo, Chrgr [Ss3/T3e]	1
	11	1025642	(80000000-	)●	Cord, Power, 16/3, 4.5 Meters, Blk [Us] (Us/Japan)	1
	11	1026330	(80000000-	)●	Cord, Power,1.0mm2 X 2.5 Meters [China]	1
	11	1026325	(80000000-	)●	Cord, Power, 1.0mm2 X 2.5 Meters [Aus]	1
	11	1032849	(80000000-	)●	Cord, Power, 4.5 Meter, Blk [Ce]	1

∇ ASSEMBLY

▲ INCLUDED IN ASSEMBLY

● RECOMMENDED STOCK ITEMS

PARKING BRAKE GROUP

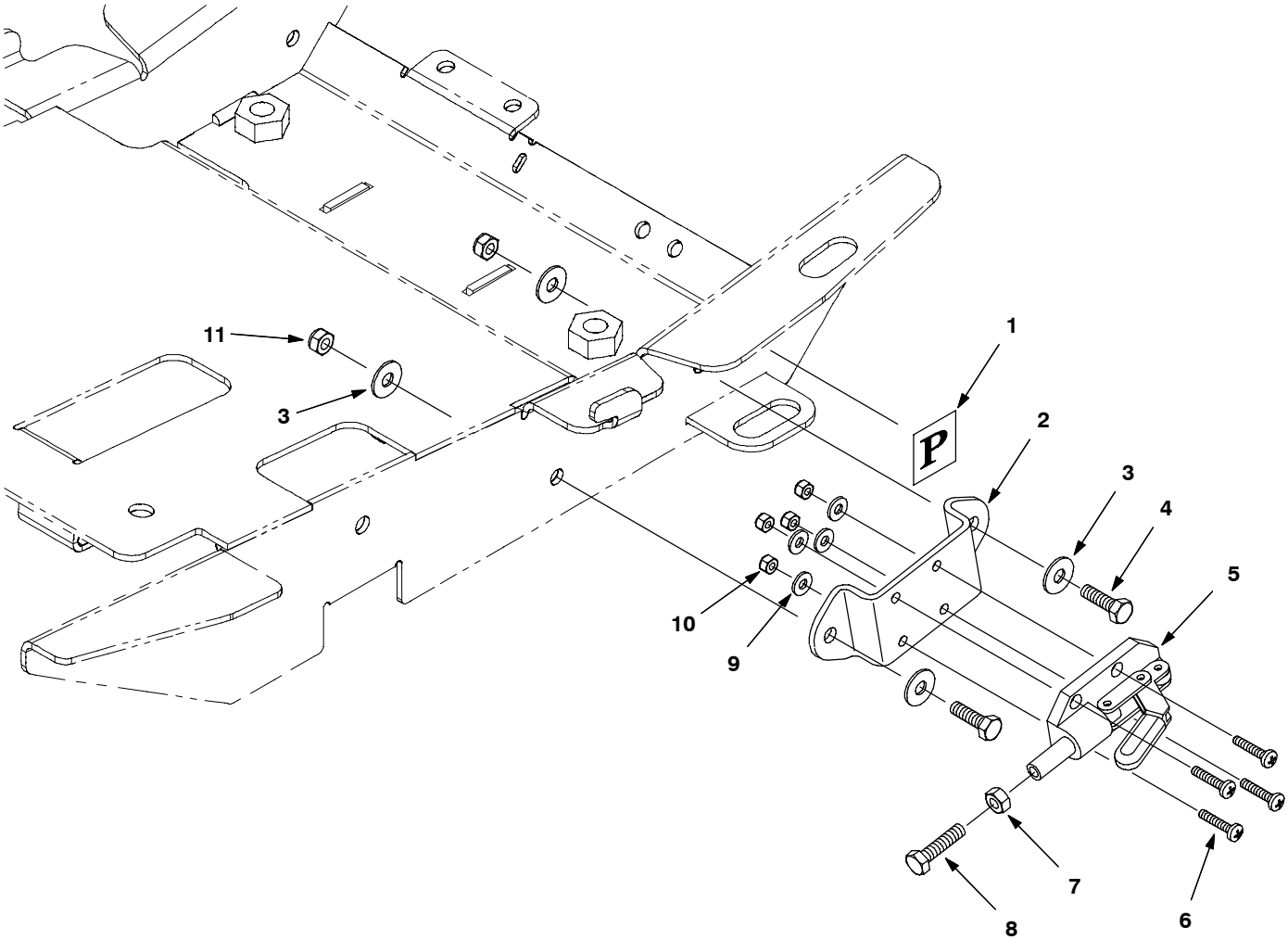

	Ref.	Part No.	Serial Number		Description	Qty.
∇		9003351	(80000000–	)●	Kit, Parking Brake	1
▲	1	600624	(80000000–	)	Label, Parking Brake, Symbol	1
▲	2	1013840	(80000000–	)	Bracket, Brake, Frame	1
▲	3	01684	(80000000–	)	Washer, Flat, 0.27b 0.69d .05, Ss	4
▲	4	08716	(80000000–	)	Screw, Hex, M6 X 1.0 X 20, Ss	2
▲	5	1013718	(80000000–	)●	Clamp, Brake, Parking	1
▲	6	12323	(80000000–	)	Screw, Pan, M4 X 0.7 X 20, Ss	4
▲	7	07785	(80000000–	)	Nut, Hex, Std, M6 X 1.00, A2, Ss	1
▲	8	09011	(80000000–	)	Screw, Hex, M8 X 1.25 X 30, Ss	1
▲	9	41579	(80000000–	)	Washer, Flat, #08, Ss	4
▲	10	33932	(80000000–	)	Nut, Hex, Lock, M4 X 0.70, Nl, Ss	4
▲	11	08712	(80000000–	)	Nut, Hex, Lock, M6 X 1.00, Ss, Nl	2

∇ ASSEMBLY

▲ INCLUDED IN ASSEMBLY

● RECOMMENDED STOCK ITEMS

EMERGENCY STOP BUTTON GROUP

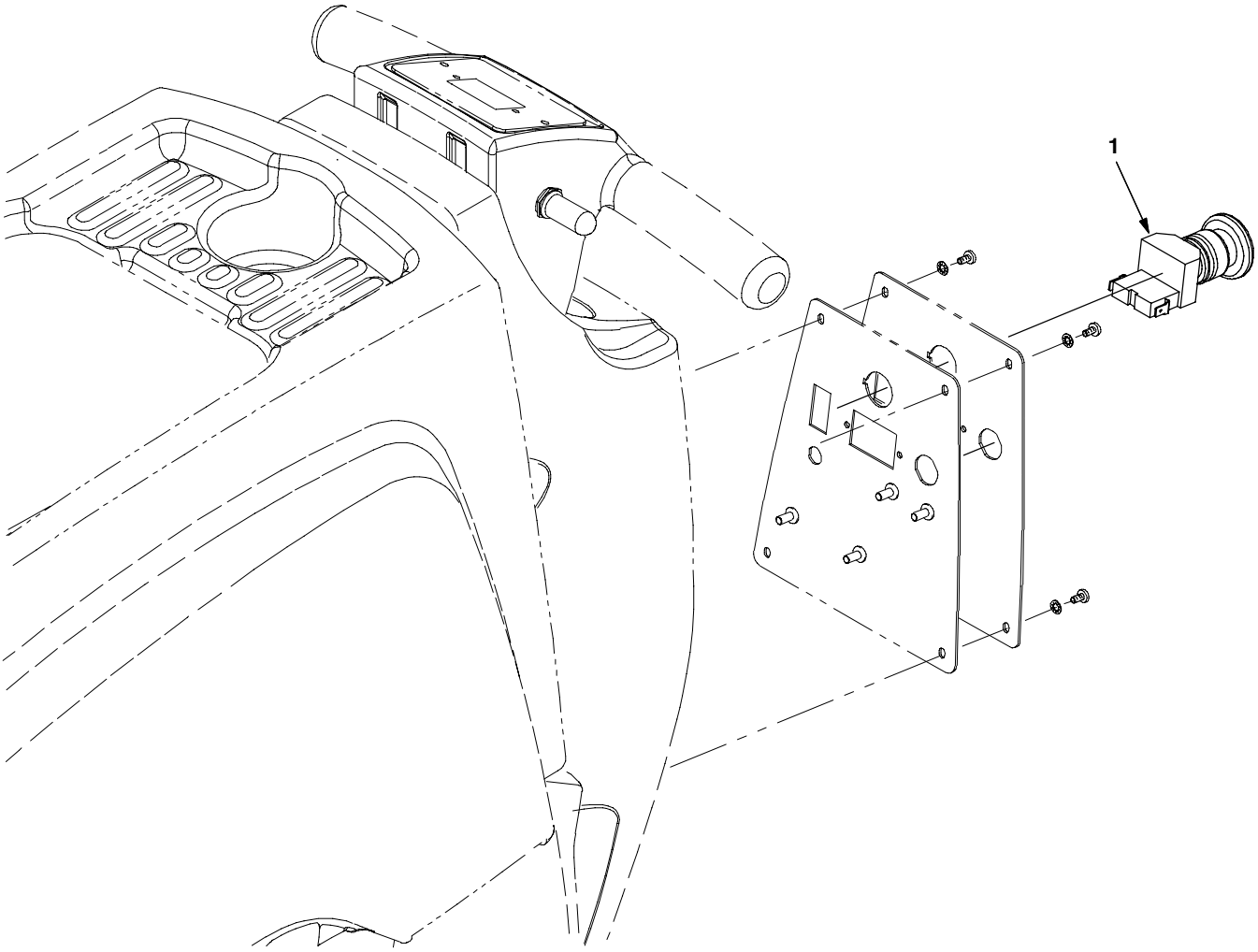

	Ref.	Part No.	Serial Number		Description	Qty.
∇		9003350	(80000000–	)●	Kit, E–Stop	1
▲	1	1011735	(80000000–	)●	Switch, Safety, Shutoff	1

∇ ASSEMBLY

▲ INCLUDED IN ASSEMBLY

● RECOMMENDED STOCK ITEMS

DOCUMENTATION GROUP

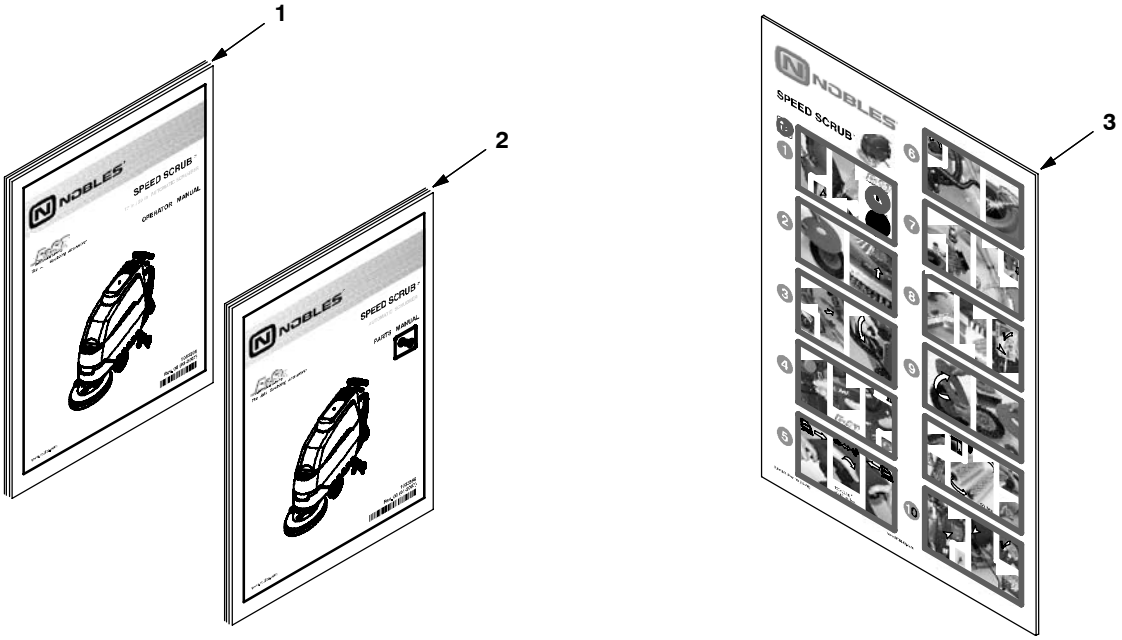

Ref.	Part No.	Serial Number	Description	Qty.
1	1033583	(80000000–)	Manual, Oprtr, En [Ss3] English	1
1	1033584	(80000000–)	Manual, Oprtr, Es [Ss3] Spanish	1
1	1033585	(80000000–)	Manual, Oprtr, Fr [Ss3] French	1
2	1033586	(80000000–)	Manual, Parts [Ss3]	1
3	1033587	(80000000–)	Instr, Use & Care, Txtls [Ss3]	1